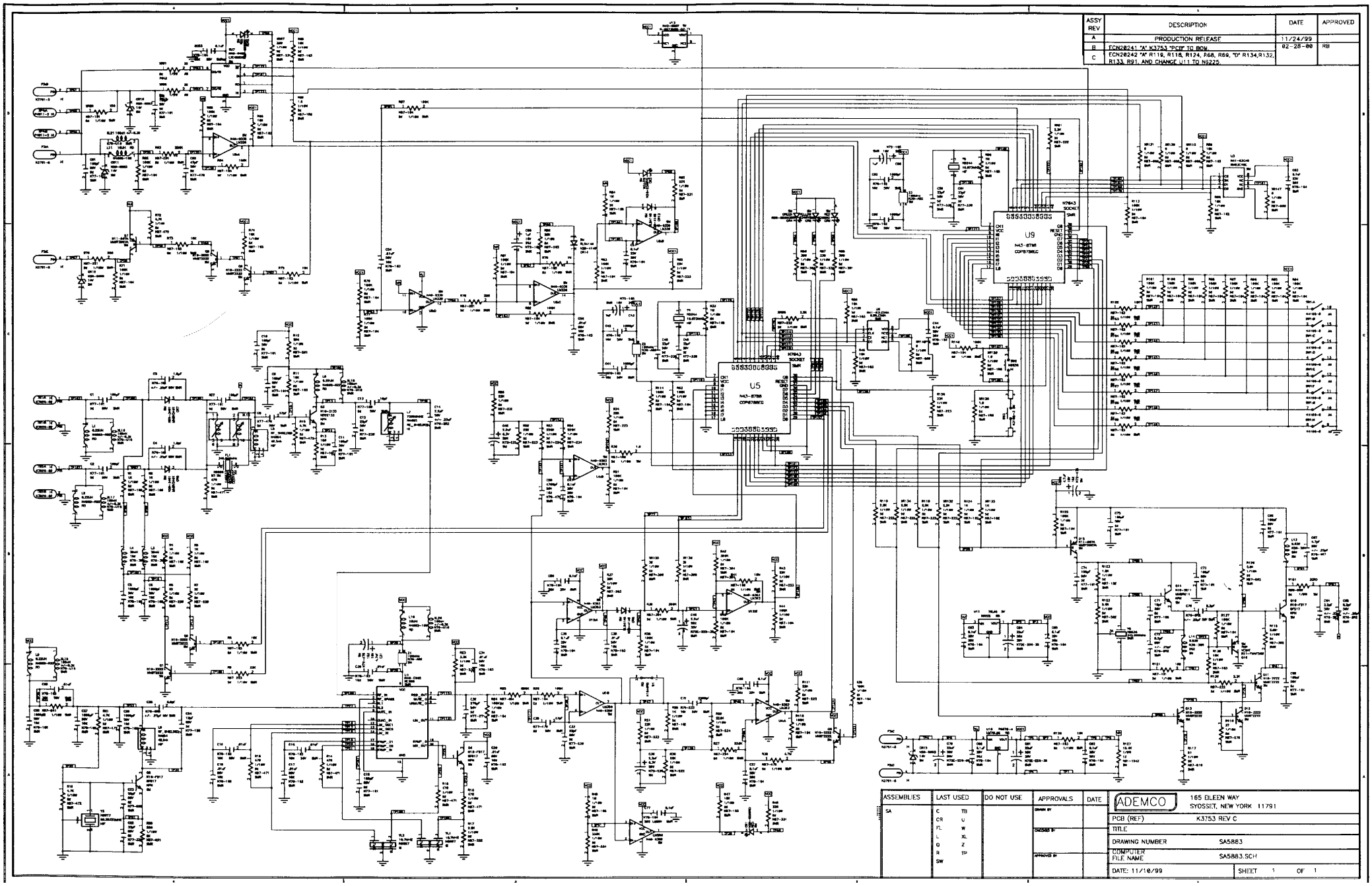

ASSY REV	DESCRIPTION	DATE	APPROVED
A	PRODUCTION RELEASE	11/24/99	
B	ECN28241 "A" K3753 "PCB" TO BOM.	02-28-00	RB
C	ECN28242 "A" R119, R118, R124, R68, R69, "D" R134,R132, R133, R91, AND CHANGE U11 TO N9225.		

ASSEMBLIES	LAST USED	DO NOT USE	APPROVALS	DATE
SA	C TB CR U FL W L XL Q Z R TP SW		DRAWN BY CHECKED BY APPROVED BY	

ADEMCO
165 OLEEN WAY
SYOSSET, NEW YORK 11791

PCB (REF)	K3753 REV C
TITLE	
DRAWING NUMBER	SA5883
COMPUTER FILE NAME	SA5883.SCH
DATE: 11/10/99	SHEET 1 OF 1