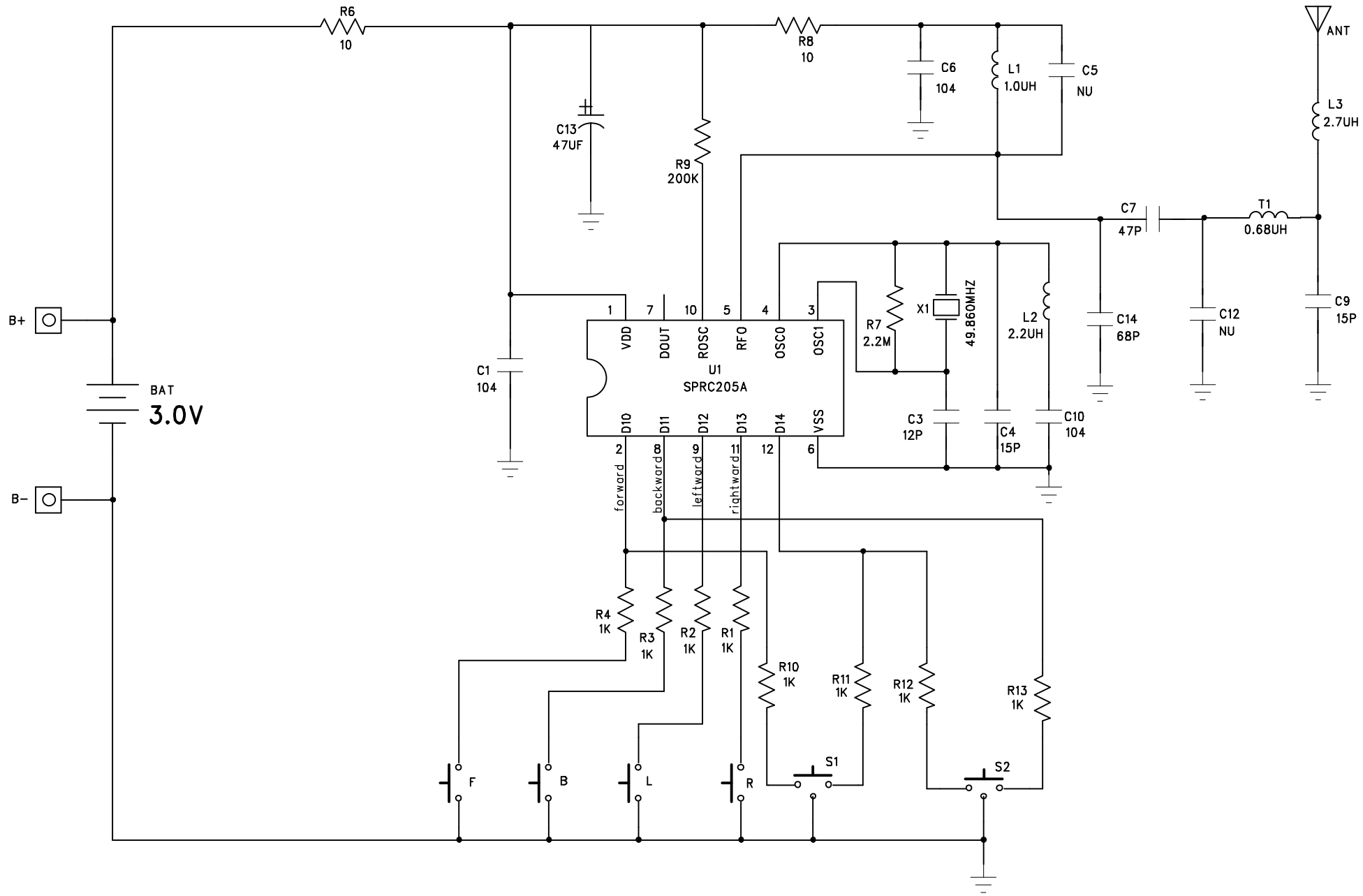

LUNG CHEONG	TITLE:	H9282 49MHZ TX FCC	DESIGN BY:	DRAWING BY:	APPROVED BY:	SHEET:
	FUNCTION:			W.Y.ZHENG		1 of 1
	DWG NO:	DZ02-0H9280-01		27.SEP.05		