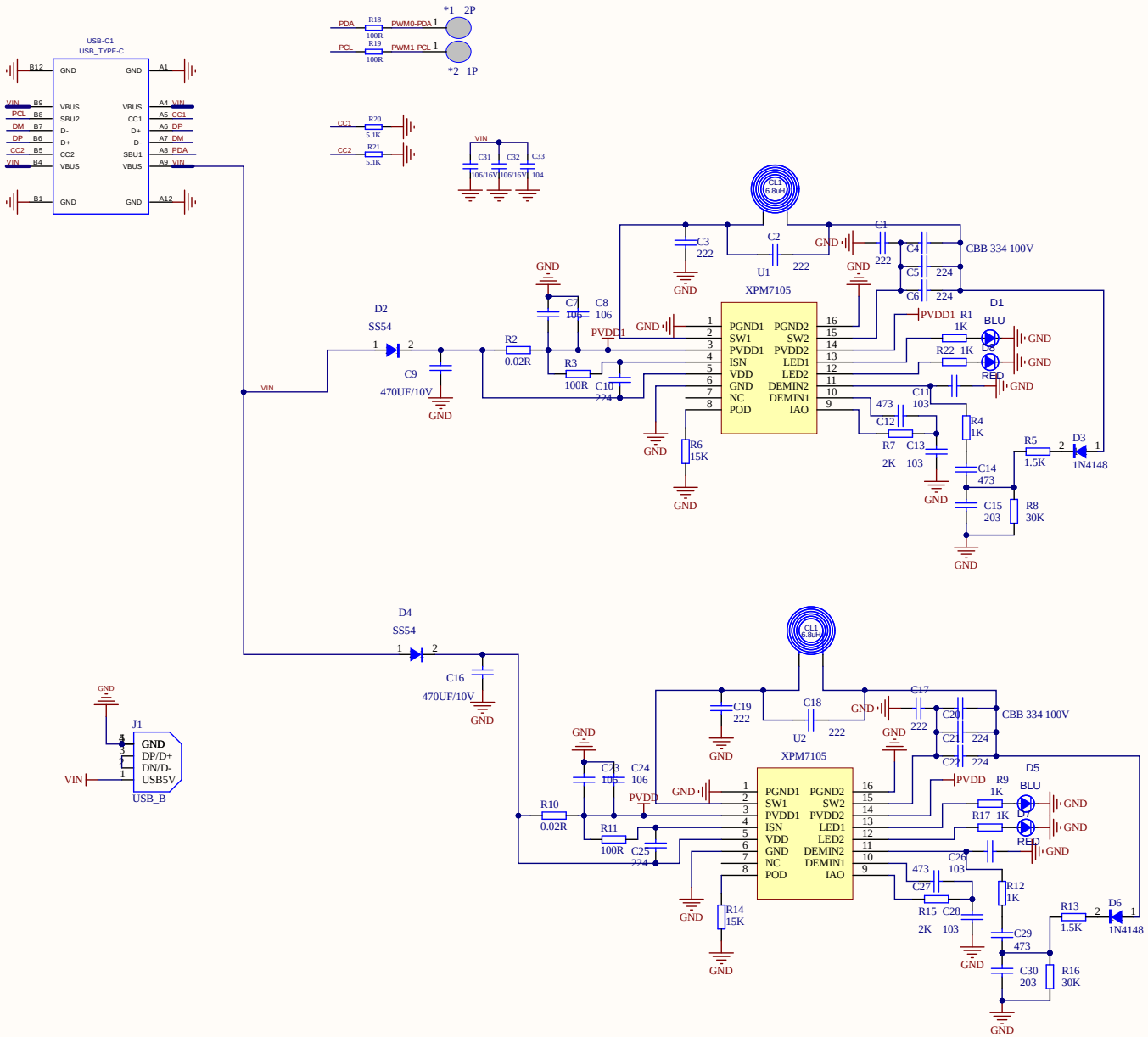
USB-C1
USB_TYPE-C
GND
VBUS
SBU2
D-
D+
CC2
SBU1
CC1
A1
A4 VIN
A5 CC1
A6 DP
A7 DM
A8 PDA
A9 VIN
A12
B12
B9
B8
B7
B6
B5
B4
B1
PDA
PCL
DM
DP
CC2
VIN
R18
100R
PWM0-PDA
R19
PWM1-PCL
*1 2P
*2 1P
CC1
R20
5.1K
R21
CC2
C31
C32
C33
106/16V
104
CL1
5.8uF
C1
C2
C3
222
U1
XPM7105
C4
C5
C6
224
CBB 334 100V
D1
BLU
RED
D2
SS54
C9
470UF/10V
R2
0.02R
C7
105
C8
106
R3
100R
C10
224
PVDD1
PGND1
SW1
PVDD1
ISN
VDD
GND
NC
POD
PGND2
SW2
PVDD2
LED1
LED2
DEMIN2
DEMIN1
IAO
R1
1K
R22 1K
C11
103
473
C12
R7
2K
C13
R4
1K
R6
15K
R5
1.5K
D3
1N4148
C14
473
C15
203
R8
30K
D4
SS54
C16
470UF/10V
J1
USB_B
DP/D+
DN/D-
USB5V
CL1
5.8uF
C19
222
C18
U2
C17
C20
C21
C22
PVDD
C23
105
C24
106
R10
0.02R
R11
100R
C25
224
R9
1K
R17 1K
D5
BLU
RED
C26
103
C27
473
R15
2K
C28
103
R12
1K
R14
15K
R13
1.5K
D6
1N4148
C29
473
C30
203
R16
30K