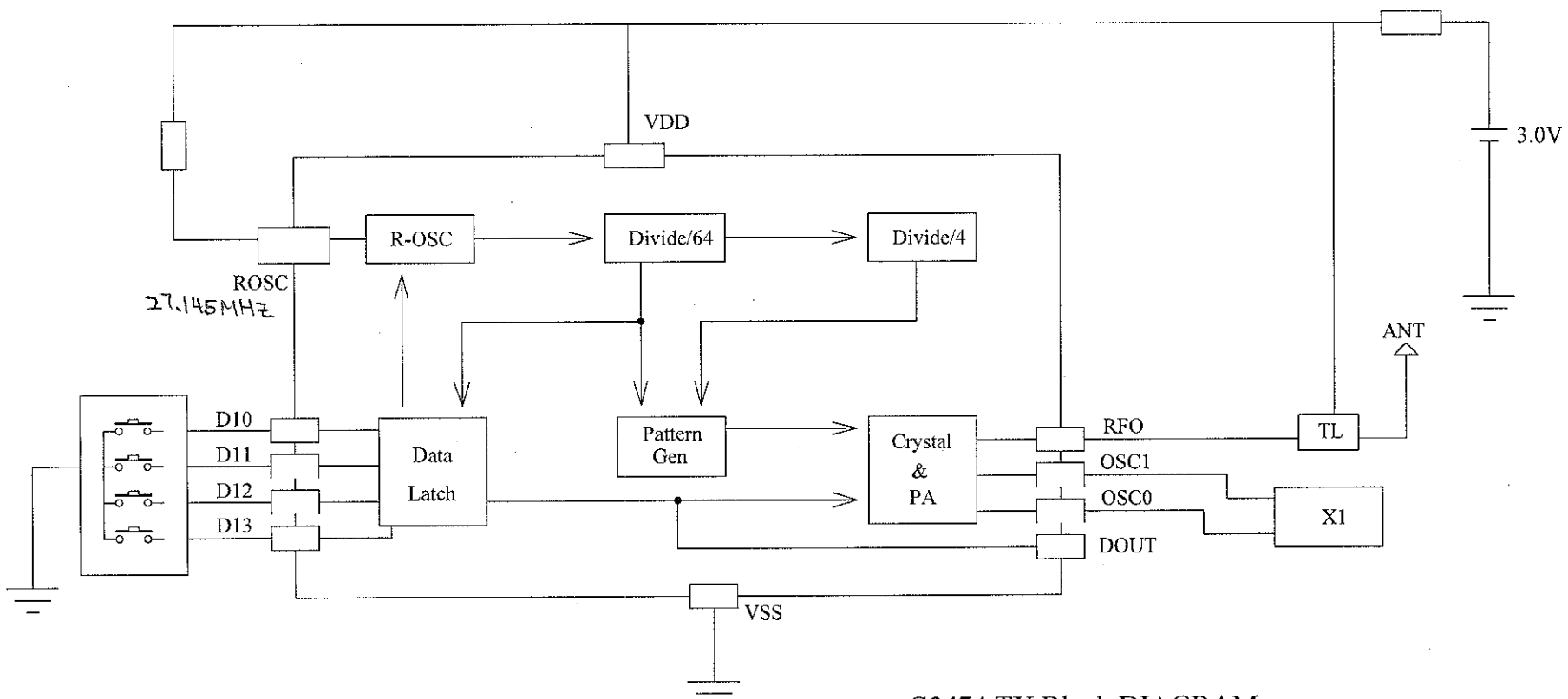

G3474 TX Block DIAGRAM

Title	G3474 TX BLOCK DIAGRAM	
Size B	Number	Revision
Date: 18-May-2005	Sheet of	
File: \\...\G3474 TX BLOCK DIAGRAM.Sch	Drawn By:	