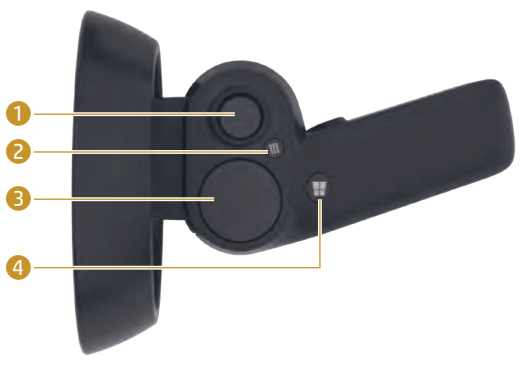

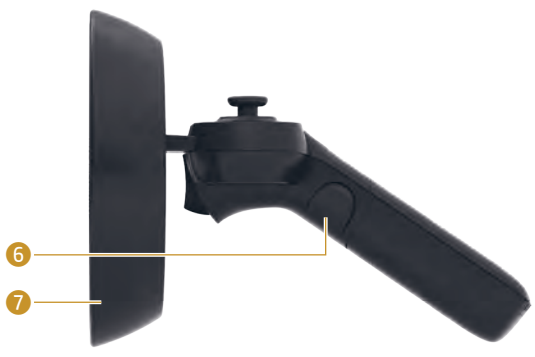

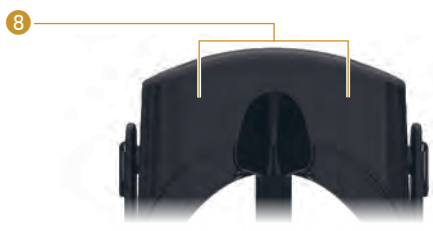

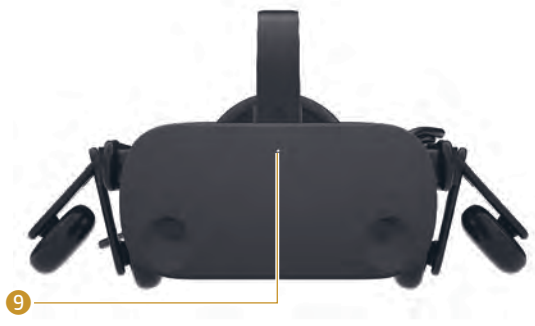

EN
1. Thumbstick (Teleport, Rotate)*
2. Menu button
3. TouchPad*
4. Windows® button
5. Trigger (Select)
6. Grab button (Grasp)
7. Lights
   Quickly blinking: Bluetooth® pairing mode
   Slowly blinking: Idle mode
   Blinking (2 times): Low battery level
   Blinking (3 times): Critical battery level
8. Microphones (2)
9. Activity light
   On: Headset is on.
10. USB/DisplayPort split cable
11. Mini DisplayPort adapter

* Make your gesture and then press to execute your action.

DA
1. Thumbstick (Teleport, Rotate)*
2. Menu button
3. TouchPad*
4. Windows® button
5. Trigger (Select)
6. Grab button (Grasp)
7. Lights
   Quickly blinking: Bluetooth® pairing mode
   Slowly blinking: Idle mode
   Blinking (2 times): Low battery level
   Blinking (3 times): Critical battery level
8. Microphones (2)
9. Activity light
   On: Headset is on.
10. USB/DisplayPort split cable
11. Mini DisplayPort adapter

* Make your gesture and then press to execute your action.

AR
1. Thumbstick (Teleport, Rotate)*
2. Menu button
3. TouchPad*
4. Windows® button
5. Trigger (Select)
6. Grab button (Grasp)
7. Lights
   Quickly blinking: Bluetooth® pairing mode
   Slowly blinking: Idle mode
   Blinking (2 times): Low battery level
   Blinking (3 times): Critical battery level
8. Microphones (2)
9. Activity light
   On: Headset is on.
10. USB/DisplayPort split cable
11. Mini DisplayPort adapter

* Make your gesture and then press to execute your action.

DE
1. Thumbstick (Teleport, Rotate)*
2. Menu button
3. TouchPad*
4. Windows® button
5. Trigger (Select)
6. Grab button (Grasp)
7. Lights
   Quickly blinking: Bluetooth® pairing mode
   Slowly blinking: Idle mode
   Blinking (2 times): Low battery level
   Blinking (3 times): Critical battery level
8. Microphones (2)
9. Activity light
   On: Headset is on.
10. USB/DisplayPort split cable
11. Mini DisplayPort adapter

* Make your gesture and then press to execute your action.

ID
1. Thumbstick (Teleport, Rotate)*
2. Menu button
3. TouchPad*
4. Windows® button
5. Trigger (Select)
6. Grab button (Grasp)
7. Lights
   Quickly blinking: Bluetooth® pairing mode
   Slowly blinking: Idle mode
   Blinking (2 times): Low battery level
   Blinking (3 times): Critical battery level
8. Microphones (2)
9. Activity light
   On: Headset is on.
10. USB/DisplayPort split cable
11. Mini DisplayPort adapter

* Make your gesture and then press to execute your action.

ES
1. Thumbstick (Teleport, Rotate)*
2. Menu button
3. TouchPad*
4. Windows® button
5. Trigger (Select)
6. Grab button (Grasp)
7. Lights
   Quickly blinking: Bluetooth® pairing mode
   Slowly blinking: Idle mode
   Blinking (2 times): Low battery level
   Blinking (3 times): Critical battery level
8. Microphones (2)
9. Activity light
   On: Headset is on.
10. USB/DisplayPort split cable
11. Mini DisplayPort adapter

* Make your gesture and then press to execute your action.

BG
1. Thumbstick (Teleport, Rotate)*
2. Menu button
3. TouchPad*
4. Windows® button
5. Trigger (Select)
6. Grab button (Grasp)
7. Lights
   Quickly blinking: Bluetooth® pairing mode
   Slowly blinking: Idle mode
   Blinking (2 times): Low battery level
   Blinking (3 times): Critical battery level
8. Microphones (2)
9. Activity light
   On: Headset is on.
10. USB/DisplayPort split cable
11. Mini DisplayPort adapter

* Make your gesture and then press to execute your action.

EL
1. Thumbstick (Teleport, Rotate)*
2. Menu button
3. TouchPad*
4. Windows® button
5. Trigger (Select)
6. Grab button (Grasp)
7. Lights
   Quickly blinking: Bluetooth® pairing mode
   Slowly blinking: Idle mode
   Blinking (2 times): Low battery level
   Blinking (3 times): Critical battery level
8. Microphones (2)
9. Activity light
   On: Headset is on.
10. USB/DisplayPort split cable
11. Mini DisplayPort adapter

* Make your gesture and then press to execute your action.

CS
1. Thumbstick (Teleport, Rotate)*
2. Menu button
3. TouchPad*
4. Windows® button
5. Trigger (Select)
6. Grab button (Grasp)
7. Lights
   Quickly blinking: Bluetooth® pairing mode
   Slowly blinking: Idle mode
   Blinking (2 times): Low battery level
   Blinking (3 times): Critical battery level
8. Microphones (2)
9. Activity light
   On: Headset is on.
10. USB/DisplayPort split cable
11. Mini DisplayPort adapter

* Make your gesture and then press to execute your action.

FR
1. Thumbstick (Teleport, Rotate)*
2. Menu button
3. TouchPad*
4. Windows® button
5. Trigger (Select)
6. Grab button (Grasp)
7. Lights
   Quickly blinking: Bluetooth® pairing mode
   Slowly blinking: Idle mode
   Blinking (2 times): Low battery level
   Blinking (3 times): Critical battery level
8. Microphones (2)
9. Activity light
   On: Headset is on.
10. USB/DisplayPort split cable
11. Mini DisplayPort adapter

* Make your gesture and then press to execute your action.

HR
1. Thumbstick (Teleport, Rotate)*
2. Menu button
3. TouchPad*
4. Windows® button
5. Trigger (Select)
6. Grab button (Grasp)
7. Lights
   Quickly blinking: Bluetooth® pairing mode
   Slowly blinking: Idle mode
   Blinking (2 times): Low battery level
   Blinking (3 times): Critical battery level
8. Microphones (2)
9. Activity light
   On: Headset is on.
10. USB/DisplayPort split cable
11. Mini DisplayPort adapter

* Make your gesture and then press to execute your action.

NO
1. Thumbstick (Teleport, Rotate)*
2. Menu button
3. TouchPad*
4. Windows® button
5. Trigger (Select)
6. Grab button (Grasp)
7. Lights
   Quickly blinking: Bluetooth® pairing mode
   Slowly blinking: Idle mode
   Blinking (2 times): Low battery level
   Blinking (3 times): Critical battery level
8. Microphones (2)
9. Activity light
   On: Headset is on.
10. USB/DisplayPort split cable
11. Mini DisplayPort adapter

* Make your gesture and then press to execute your action.

SK
1. Thumbstick (Teleport, Rotate)*
2. Menu button
3. TouchPad*
4. Windows® button
5. Trigger (Select)
6. Grab button (Grasp)
7. Lights
   Quickly blinking: Bluetooth® pairing mode
   Slowly blinking: Idle mode
   Blinking (2 times): Low battery level
   Blinking (3 times): Critical battery level
8. Microphones (2)
9. Activity light
   On: Headset is on.
10. USB/DisplayPort split cable
11. Mini DisplayPort adapter

* Make your gesture and then press to execute your action.

TR
1. Thumbstick (Teleport, Rotate)*
2. Menu button
3. TouchPad*
4. Windows® button
5. Trigger (Select)
6. Grab button (Grasp)
7. Lights
   Quickly blinking: Bluetooth® pairing mode
   Slowly blinking: Idle mode
   Blinking (2 times): Low battery level
   Blinking (3 times): Critical battery level
8. Microphones (2)
9. Activity light
   On: Headset is on.
10. USB/DisplayPort split cable
11. Mini DisplayPort adapter

* Make your gesture and then press to execute your action.

IT
1. Thumbstick (Teleport, Rotate)*
2. Menu button
3. TouchPad*
4. Windows® button
5. Trigger (Select)
6. Grab button (Grasp)
7. Lights
   Quickly blinking: Bluetooth® pairing mode
   Slowly blinking: Idle mode
   Blinking (2 times): Low battery level
   Blinking (3 times): Critical battery level
8. Microphones (2)
9. Activity light
   On: Headset is on.
10. USB/DisplayPort split cable
11. Mini DisplayPort adapter

* Make your gesture and then press to execute your action.

PL
1. Thumbstick (Teleport, Rotate)*
2. Menu button
3. TouchPad*
4. Windows® button
5. Trigger (Select)
6. Grab button (Grasp)
7. Lights
   Quickly blinking: Bluetooth® pairing mode
   Slowly blinking: Idle mode
   Blinking (2 times): Low battery level
   Blinking (3 times): Critical battery level
8. Microphones (2)
9. Activity light
   On: Headset is on.
10. USB/DisplayPort split cable
11. Mini DisplayPort adapter

* Make your gesture and then press to execute your action.

SL
1. Thumbstick (Teleport, Rotate)*
2. Menu button
3. TouchPad*
4. Windows® button
5. Trigger (Select)
6. Grab button (Grasp)
7. Lights
   Quickly blinking: Bluetooth® pairing mode
   Slowly blinking: Idle mode
   Blinking (2 times): Low battery level
   Blinking (3 times): Critical battery level
8. Microphones (2)
9. Activity light
   On: Headset is on.
10. USB/DisplayPort split cable
11. Mini DisplayPort adapter

* Make your gesture and then press to execute your action.

UK
1. Thumbstick (Teleport, Rotate)*
2. Menu button
3. TouchPad*
4. Windows® button
5. Trigger (Select)
6. Grab button (Grasp)
7. Lights
   Quickly blinking: Bluetooth® pairing mode
   Slowly blinking: Idle mode
   Blinking (2 times): Low battery level
   Blinking (3 times): Critical battery level
8. Microphones (2)
9. Activity light
   On: Headset is on.
10. USB/DisplayPort split cable
11. Mini DisplayPort adapter

* Make your gesture and then press to execute your action.

KK
1. Thumbstick (Teleport, Rotate)*
2. Menu button
3. TouchPad*
4. Windows® button
5. Trigger (Select)
6. Grab button (Grasp)
7. Lights
   Quickly blinking: Bluetooth® pairing mode
   Slowly blinking: Idle mode
   Blinking (2 times): Low battery level
   Blinking (3 times): Critical battery level
8. Microphones (2)
9. Activity light
   On: Headset is on.
10. USB/DisplayPort split cable
11. Mini DisplayPort adapter

* Make your gesture and then press to execute your action.

PT
1. Thumbstick (Teleport, Rotate)*
2. Menu button
3. TouchPad*
4. Windows® button
5. Trigger (Select)
6. Grab button (Grasp)
7. Lights
   Quickly blinking: Bluetooth® pairing mode
   Slowly blinking: Idle mode
   Blinking (2 times): Low battery level
   Blinking (3 times): Critical battery level
8. Microphones (2)
9. Activity light
   On: Headset is on.
10. USB/DisplayPort split cable
11. Mini DisplayPort adapter

* Make your gesture and then press to execute your action.

FI
1. Thumbstick (Teleport, Rotate)*
2. Menu button
3. TouchPad*
4. Windows® button
5. Trigger (Select)
6. Grab button (Grasp)
7. Lights
   Quickly blinking: Bluetooth® pairing mode
   Slowly blinking: Idle mode
   Blinking (2 times): Low battery level
   Blinking (3 times): Critical battery level
8. Microphones (2)
9. Activity light
   On: Headset is on.
10. USB/DisplayPort split cable
11. Mini DisplayPort adapter

* Make your gesture and then press to execute your action.

JA
1. Thumbstick (Teleport, Rotate)*
2. Menu button
3. TouchPad*
4. Windows® button
5. Trigger (Select)
6. Grab button (Grasp)
7. Lights
   Quickly blinking: Bluetooth® pairing mode
   Slowly blinking: Idle mode
   Blinking (2 times): Low battery level
   Blinking (3 times): Critical battery level
8. Microphones (2)
9. Activity light
   On: Headset is on.
10. USB/DisplayPort split cable
11. Mini DisplayPort adapter

* Make your gesture and then press to execute your action.

LV
1. Thumbstick (Teleport, Rotate)*
2. Menu button
3. TouchPad*
4. Windows® button
5. Trigger (Select)
6. Grab button (Grasp)
7. Lights
   Quickly blinking: Bluetooth® pairing mode
   Slowly blinking: Idle mode
   Blinking (2 times): Low battery level
   Blinking (3 times): Critical battery level
8. Microphones (2)
9. Activity light
   On: Headset is on.
10. USB/DisplayPort split cable
11. Mini DisplayPort adapter

* Make your gesture and then press to execute your action.

BR
1. Thumbstick (Teleport, Rotate)*
2. Menu button
3. TouchPad*
4. Windows® button
5. Trigger (Select)
6. Grab button (Grasp)
7. Lights
   Quickly blinking: Bluetooth® pairing mode
   Slowly blinking: Idle mode
   Blinking (2 times): Low battery level
   Blinking (3 times): Critical battery level
8. Microphones (2)
9. Activity light
   On: Headset is on.
10. USB/DisplayPort split cable
11. Mini DisplayPort adapter

* Make your gesture and then press to execute your action.

SR
1. Thumbstick (Teleport, Rotate)*
2. Menu button
3. TouchPad*
4. Windows® button
5. Trigger (Select)
6. Grab button (Grasp)
7. Lights
   Quickly blinking: Bluetooth® pairing mode
   Slowly blinking: Idle mode
   Blinking (2 times): Low battery level
   Blinking (3 times): Critical battery level
8. Microphones (2)
9. Activity light
   On: Headset is on.
10. USB/DisplayPort split cable
11. Mini DisplayPort adapter

* Make your gesture and then press to execute your action.

KO
1. Thumbstick (Teleport, Rotate)*
2. Menu button
3. TouchPad*
4. Windows® button
5. Trigger (Select)
6. Grab button (Grasp)
7. Lights
   Quickly blinking: Bluetooth® pairing mode
   Slowly blinking: Idle mode
   Blinking (2 times): Low battery level
   Blinking (3 times): Critical battery level
8. Microphones (2)
9. Activity light
   On: Headset is on.
10. USB/DisplayPort split cable
11. Mini DisplayPort adapter

* Make your gesture and then press to execute your action.

LT
1. Thumbstick (Teleport, Rotate)*
2. Menu button
3. TouchPad*
4. Windows® button
5. Trigger (Select)
6. Grab button (Grasp)
7. Lights
   Quickly blinking: Bluetooth® pairing mode
   Slowly blinking: Idle mode
   Blinking (2 times): Low battery level
   Blinking (3 times): Critical battery level
8. Microphones (2)
9. Activity light
   On: Headset is on.
10. USB/DisplayPort split cable
11. Mini DisplayPort adapter

* Make your gesture and then press to execute your action.

RO
1. Thumbstick (Teleport, Rotate)*
2. Menu button
3. TouchPad*
4. Windows® button
5. Trigger (Select)
6. Grab button (Grasp)
7. Lights
   Quickly blinking: Bluetooth® pairing mode
   Slowly blinking: Idle mode
   Blinking (2 times): Low battery level
   Blinking (3 times): Critical battery level
8. Microphones (2)
9. Activity light
   On: Headset is on.
10. USB/DisplayPort split cable
11. Mini DisplayPort adapter

* Make your gesture and then press to execute your action.

SE
1. Thumbstick (Teleport, Rotate)*
2. Menu button
3. TouchPad*
4. Windows® button
5. Trigger (Select)
6. Grab button (Grasp)
7. Lights
   Quickly blinking: Bluetooth® pairing mode
   Slowly blinking: Idle mode
   Blinking (2 times): Low battery level
   Blinking (3 times): Critical battery level
8. Microphones (2)
9. Activity light
   On: Headset is on.
10. USB/DisplayPort split cable
11. Mini DisplayPort adapter

* Make your gesture and then press to execute your action.

CN
1. Thumbstick (Teleport, Rotate)*
2. Menu button
3. TouchPad*
4. Windows® button
5. Trigger (Select)
6. Grab button (Grasp)
7. Lights
   Quickly blinking: Bluetooth® pairing mode
   Slowly blinking: Idle mode
   Blinking (2 times): Low battery level
   Blinking (3 times): Critical battery level
8. Microphones (2)
9. Activity light
   On: Headset is on.
10. USB/DisplayPort split cable
11. Mini DisplayPort adapter

* Make your gesture and then press to execute your action.

HU
1. Thumbstick (Teleport, Rotate)*
2. Menu button
3. TouchPad*
4. Windows® button
5. Trigger (Select)
6. Grab button (Grasp)
7. Lights
   Quickly blinking: Bluetooth® pairing mode
   Slowly blinking: Idle mode
   Blinking (2 times): Low battery level
   Blinking (3 times): Critical battery level
8. Microphones (2)
9. Activity light
   On: Headset is on.
10. USB/DisplayPort split cable
11. Mini DisplayPort adapter

* Make your gesture and then press to execute your action.

RU
1. Thumbstick (Teleport, Rotate)*
2. Menu button
3. TouchPad*
4. Windows® button
5. Trigger (Select)
6. Grab button (Grasp)
7. Lights
   Quickly blinking: Bluetooth® pairing mode
   Slowly blinking: Idle mode
   Blinking (2 times): Low battery level
   Blinking (3 times): Critical battery level
8. Microphones (2)
9. Activity light
   On: Headset is on.
10. USB/DisplayPort split cable
11. Mini DisplayPort adapter

* Make your gesture and then press to execute your action.

TH
1. Thumbstick (Teleport, Rotate)*
2. Menu button
3. TouchPad*
4. Windows® button
5. Trigger (Select)
6. Grab button (Grasp)
7. Lights
   Quickly blinking: Bluetooth® pairing mode
   Slowly blinking: Idle mode
   Blinking (2 times): Low battery level
   Blinking (3 times): Critical battery level
8. Microphones (2)
9. Activity light
   On: Headset is on.
10. USB/DisplayPort split cable
11. Mini DisplayPort adapter

* Make your gesture and then press to execute your action.

TW
1. Thumbstick (Teleport, Rotate)*
2. Menu button
3. TouchPad*
4. Windows® button
5. Trigger (Select)
6. Grab button (Grasp)
7. Lights
   Quickly blinking: Bluetooth® pairing mode
   Slowly blinking: Idle mode
   Blinking (2 times): Low battery level
   Blinking (3 times): Critical battery level
8. Microphones (2)
9. Activity light
   On: Headset is on.
10. USB/DisplayPort split cable
11. Mini DisplayPort adapter

* Make your gesture and then press to execute your action.

NL
1. Thumbstick (Teleport, Rotate)*
2. Menu button
3. TouchPad*
4. Windows® button
5. Trigger (Select)
6. Grab button (Grasp)
7. Lights
   Quickly blinking: Bluetooth® pairing mode
   Slowly blinking: Idle mode
   Blinking (2 times): Low battery level
   Blinking (3 times): Critical battery level
8. Microphones (2)
9. Activity light
   On: Headset is on.
10. USB/DisplayPort split cable
11. Mini DisplayPort adapter

* Make your gesture and then press to execute your action.

© Copyright 2019 HP Development Company, L.P.

Bluetooth is a trademark owned by its proprietor and used by HP Inc. under license. Windows is either a registered trademark or trademark of Microsoft Corporation in the United States and/or other countries.

The information contained herein is subject to change without notice. The only warranties for HP products and services are set forth in the express warranty statements accompanying such products and services. Nothing herein should be construed as constituting an additional warranty. HP shall not be liable for technical or editorial errors or omissions contained herein.

First Edition: February 2019