Item	Qty	Reference	Part Number	Description
1	1	B1	023B0099	9V BATTERY CONNECTOR
2	6	C1,3,4,8,12,14	030D71020002	CAP SMD0805 100pF 5% NPO 50V
3	2	C15,16	030D71052R00	CAP SMD 805 .1uF 20% X7R
4	1	C2	030D73603000	CAP SMD0805 3.6pF +/-.1 NPO
5	1	C9	030D73903000	CAP SMD0805 3.9pF +/-.1 NPO
6	1	C5	030D74700002	CAP SMD0805 4.7pF 5% NPO 50V
7	3	C6,7,20	030D76800000	CAP SMD0805 6.8pF 5% NPO
8	1	U1	125C0273	SOIC, SERIAL EEPROM 24LC01B
9	1	U3	127A0013	MICROCONTROLLER CLK1
10	1	Q4	207C0069	TRANSISTOR, SMD PNP SWITCH
11	3	Q5,6,7	207C0073	TRANSISTOR, SMD NPN SWITCH
12	3	Q1,2,3	207C0074	TRANSISTOR, SMD NPN RF
13	1	J1	SEE NOTE 1	
14	3	C17,18,19	030B0431	CAPACITOR, VARIABLE TOP ADJ
15	3	R26,27,28	311C1015	RES SMD0805 100 5%
16	3	R18,22,25	311C1035	RES SMD0805 10K 5%
17	4	R17,19,20,21	311C1045	RES SMD0805 100K 5%
18	10	R3,5,6,7,9,10,11,13,14,15	311C1535	RES SMD0805 15K 5%
19	1	R1	311C1825	RES SMD0805 1.8K 5%
20	2	R2,4	311C3325	RES SMD0805 3.3K 5%
21	2	R23,24	311C3315	RES SMD0805 330 5%
22	1	R12	311C4725	RES SMD0805 4.7K 5%
23	2	R8,16	311C6825	RES SMD0805 6.8K 5%
24	3	L1,2,3	040A0118	LOOP, ANTENNA
25	2	L4,5	040A0104	INDUCTOR 1uH
26	1	D5	052B0065	DIODE, SMD SIGNAL
27	3	D1,2,3	052B0070	DIODE, SMD DUAL COMMON CATHODE
28	1	D16	052B0107	DIODE, SMD ZENER 5.6V
29	6	D10,11,12,13,14,15	052B0114	DIODE, LED SMD805 YELLOW
30	1	X1	CLKR300-004	RESONATOR, SMT 4MHz
31	1	PCB	014D0618	CLICKER KEYPAD PCB

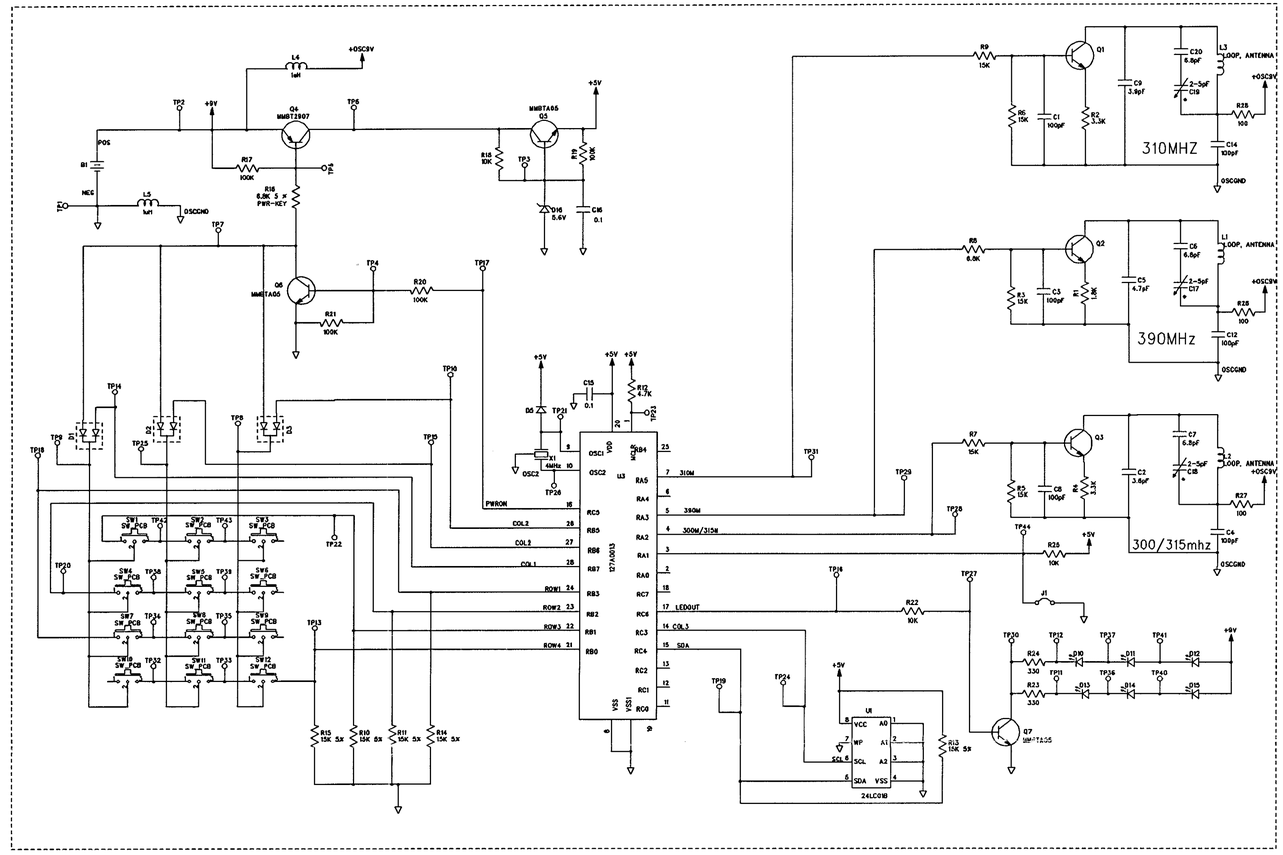

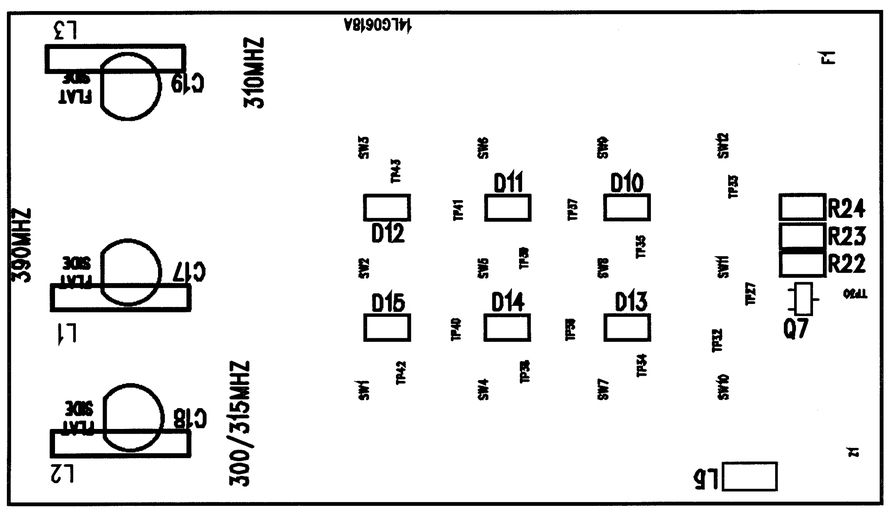

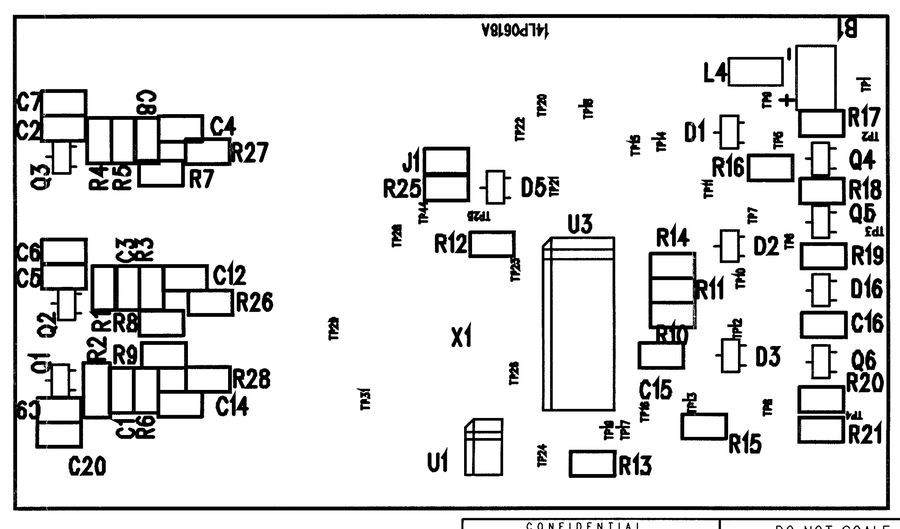

NOTES

1

	J1
CLK1	–
CLKC1	311C0001

2. ALL COMPONENTS TO BE INSERTED TO WITHIN 0.020" OF BODY OR PREFORM LIMITS.
3. LEAD CLIP SPECIFICATION (WIRE LEADED PARTS ONLY): 0.050" MIN, 0.095" MAX.
4. CLEANING OF ASSEMBLY WITH A CLEANING SOLVENT AFTER WAVESOLDER IS NOT PERMITTED.

PART NUMBER			195D1579	A
ECN/DATE	BY	APP	REVISION	REV
R-221 10/03/01	JJC	RK	PRELIMINARY	A

CONFIDENTIAL
THIS DRAWING AND/OR THE INFORMATION CONTAINED HEREIN IS AND REMAINS THE SOLE PROPERTY OF, AND IS PROPRIETARY TO, THE CHAMBERLAIN GROUP, INC. (CHAMBERLAIN). THIS DRAWING AND/OR INFORMATION SHALL BE KEPT CONFIDENTIAL AND MAY NOT BE REPRODUCED, COPIED, MODIFIED, DISCLOSED, TRANSFERRED, OR MADE AVAILABLE TO OTHERS, EXCEPT WITH THE WRITTEN CONSENT OF CHAMBERLAIN. THIS DRAWING AND/OR ALL COPIES, IF ANY, ARE SUBJECT TO RETURN TO CHAMBERLAIN.

THIS IS A COMPUTER GENERATED DRAWING

DO NOT CHANGE THIS DOCUMENT WITHOUT UPDATING THE COMPUTER DATA BASE.

DO NOT SCALE DRAWING

TOLERENCE UNLESS OTHERWISE SPECIFIED
±.010 .00 DECIMAL
±.005 .000 DECIMAL
±1/64 ON FRACTIONS
±30' ON ANGLES
±.003 ON HOLES

THIS COPY ISSUED:

FINISH

DRAWN	JJC	DATE	10/1/01
CHECKED			
APPROVED			

CHAMBERLAIN CONSUMER PRODUCTS GROUP
A UNIT OF DUCHOSSOIS INDUSTRIES, INC.

NAME: ASSEMBLY, PCB CLICKER CLK1 & CLKC1

MATERIAL

SCALE | PART NUMBER: 195D1579 | REV: A