SPECIFICATION

SHEET FOR APPROVAL

（Revision：R：A1）

	CUSTOMER	Morefun
	CS P/N	MF960B30 Z400
	PART NAME	3in1
	FREQUENCY	1575MHz，2400-2500MHz，5150-5850MHz。
	ZTX NO.	F.00000734
	DATE	2024-11-5

Remark：

Sign(Customer confirms signature and seal)： _____

ZHONG TIAN XUN TECHNOLOGY CO., LTD		
ME CHECKED	RF CHECKED	APPROVAL
Hu xiaoliang	Lin quan	Wang erdong

Address: No. 34 Shilong Avenue, Shiyan Street, Baoan District, Shenzhen (former Tengda Industrial Park) Zip code: 518000

Fuzhou Address: Unit SC02, 2nd Floor, Building 45, Zhouyuan, Jinshan Industrial Zone, Cangshan District, Fuzhou City, Fujian Province Zip Code: 350000

Tel: 0591-83582969 Fax: 0591-83583660 http://www.chinaztx.com

Revision history

Rev	Date	status
A1	2024-10-29	First edition.

Index

		Revision history	
1.		***Test equipment***	***4***
2.		***Antenna test data***	***5~12***
	2-1	***VSWR***	***5***
	2-2	***Antenna passive test***	***6~8***
	2-3	***3D radiation drawing***	***9***
	2-4	***Active test data***	***10***
	2-5	***Matching circuit***	***11***
	2-6	***Environment treatment***	***12***
3.		***Mechanical Specification***	***13***
4.		***The packing way***	***14***

1. Test equipment

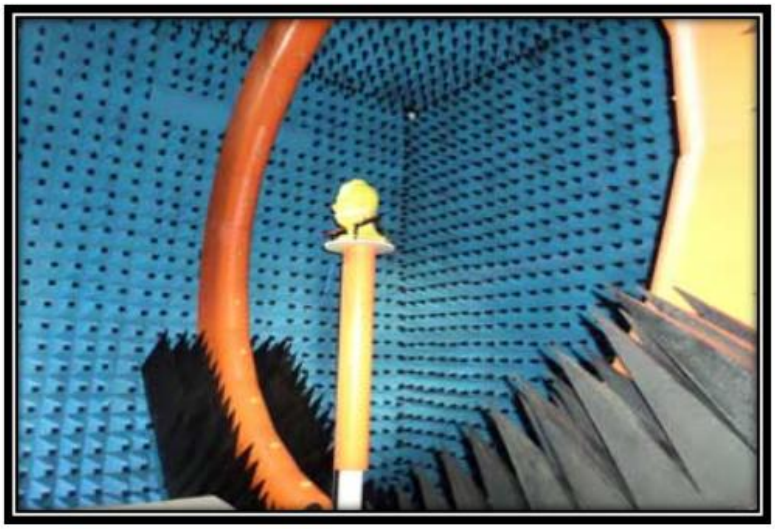

Owned 6 microwave dark room, equipped 2 sets world leading France Satimo SG24 OTA certification test systems（one in SHENZHEN, another one in Shanghai）, ETS OTA Standard test system，Blue test reverberation test system which is High repeatability, high accuracy and high resolution. It can quickly provide accurate test reports, fully meet the CITA standards.

Testing range:

Support active, passive testing of GSM/CDMA/WCDMA/TD-SCDMA/LTE/WIFI/WLAN/WiMax/BT/GPS/MIMO/UWB within0.4-6G.

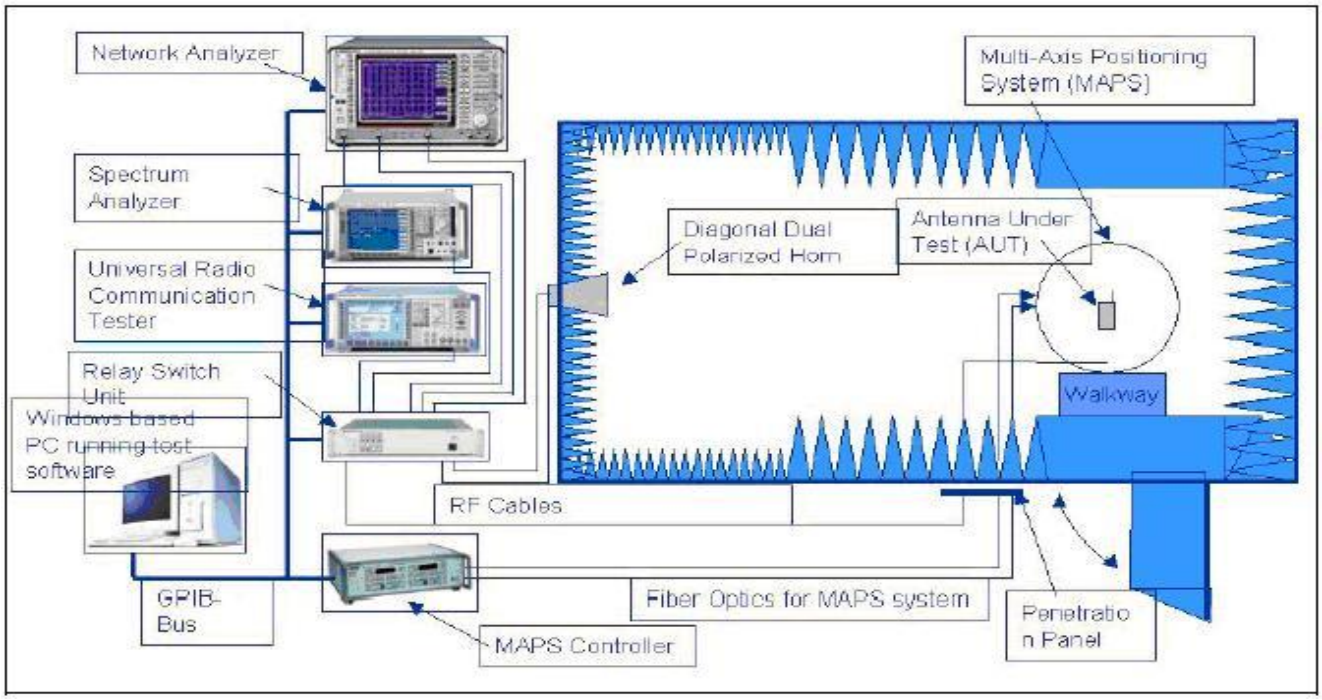

2.Antenna test data

2-1 VSWR

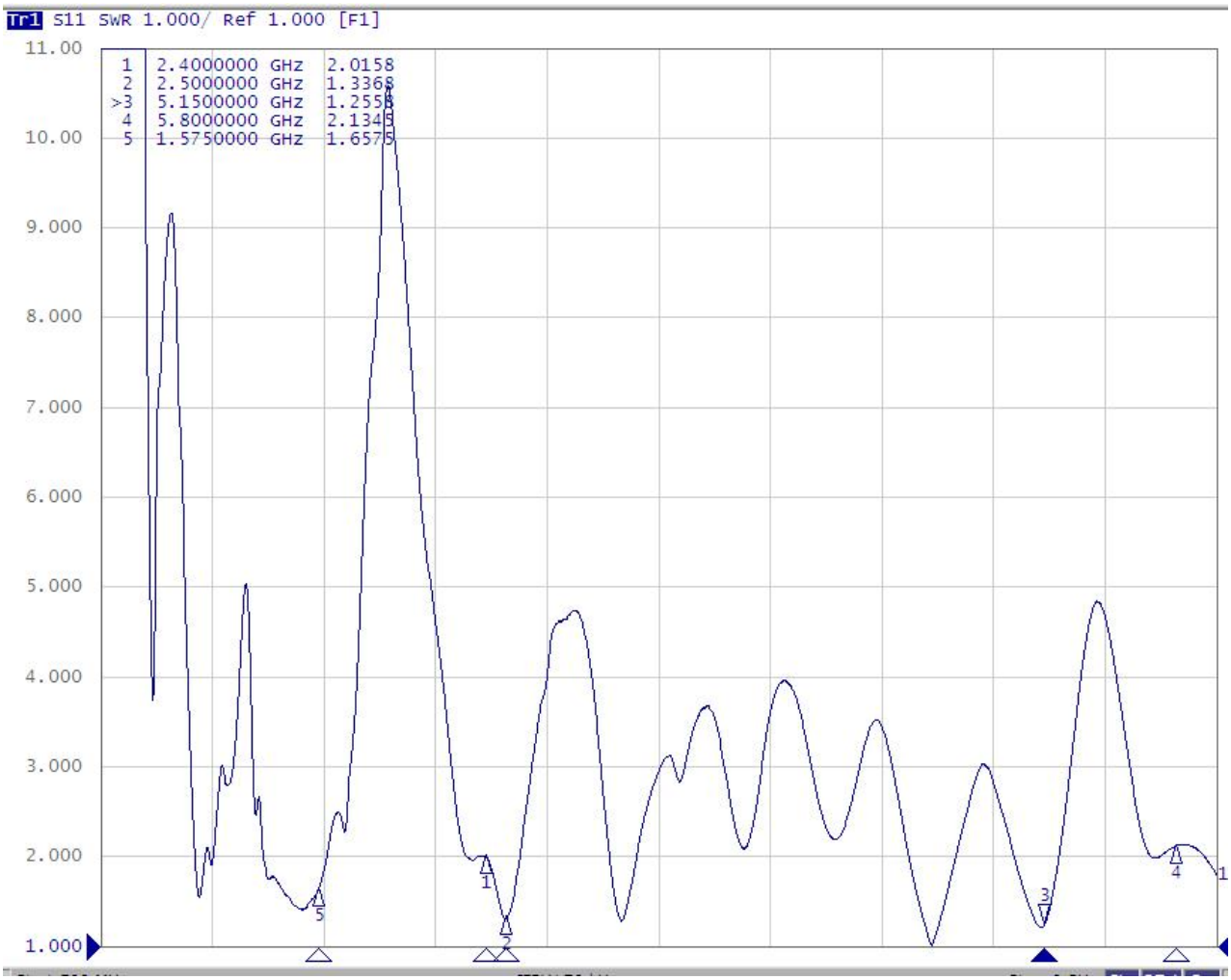

2-2 Antenna passive test

chNo	Freq	Gain	Efficiency_Pcent
1	1550	-5.14692	17.67225
2	1555	-4.80653	18.2851
3	1560	-4.92995	20.31058
4	1565	-5.16898	17.98423
5	1570	-5.29535	18.08723
6	1575	-5.44924	20.27785
7	1580	-5.80008	17.75491
8	1585	-6.13203	16.75574
9	1590	-6.16142	16.32194
10	1595	-5.9282	16.75355
11	1600	-5.71428	18.13424
12	1605	-5.66008	17.97911
13	1610	-5.82597	17.96579
14	1615	-5.91586	18.13134
15	1620	-5.65125	18.55614
16	2400	-0.45781	34.41088

17	2410	-0.37873	35.19371
18	2420	-0.3287	36.27704
19	2430	-0.15197	37.59169
20	2440	-0.03631	38.09403
21	2450	0.271296	38.72886
22	2460	0.276927	39.97362
23	2470	0.805145	42.39823
24	2480	1.173395	42.00389
25	2490	1.077551	37.95507
26	2500	1.023368	34.56522
27	5150	0.550237	36.4719
28	5200	0.701749	37.51767
29	5250	-0.53471	31.40217
30	5300	-0.01743	32.15732
31	5350	0.20069	26.6217
32	5400	0.887045	29.43616
33	5450	0.220657	28.63437
34	5500	0.879328	33.23497

35	5550	2.25018	36.42671
36	5600	3.548016	39.01302
37	5650	5.712897	42.59526
38	5700	7.100379	40.30383
39	5750	5.829452	43.50125
40	5800	6.635241	38.60826
41	5850	6.532942	37.83179

2-3 3D radiation drawing

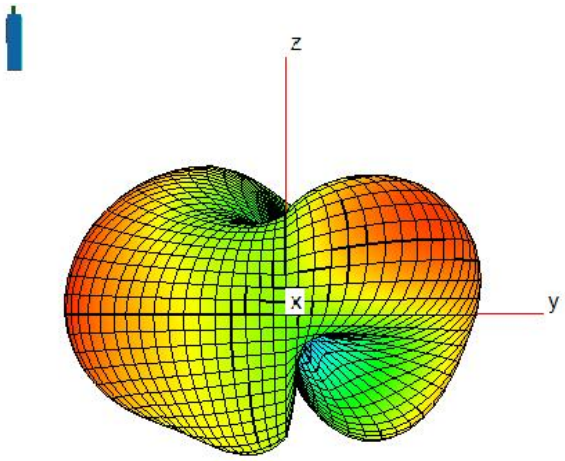

1585MHz

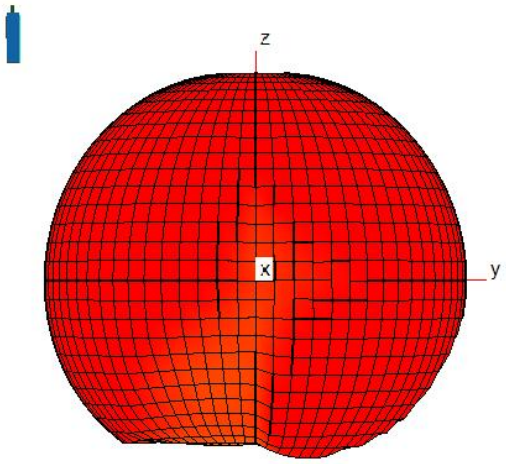

2450MHz

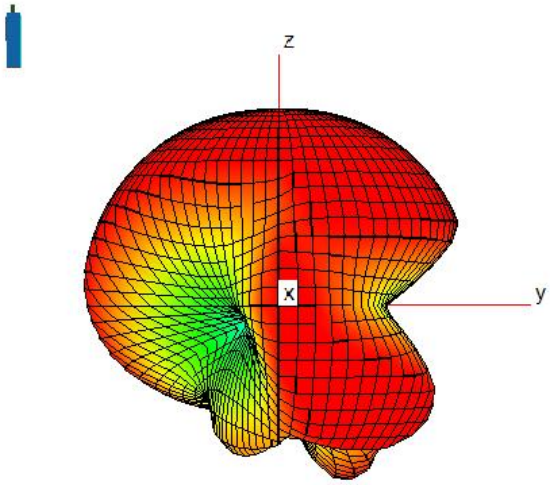

5500MHz

2-4 Active test data

2.4G 802.11b	channel	1	7	13
	TRP	14.58	15.06	14.77
	TIS	-84.77	-84.86	-84.87
5G 802.11a	channel	36	64	157
	TRP	9.31	5.17	5.47
	TIS	-71.13	-67.41	-66.40

2-5 Matching circuit

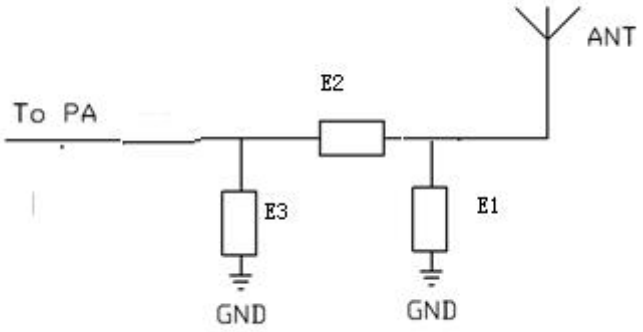

Matching structure	
E1	NC
E2	0Ω
E3	NC

2-6 Environment treatment

See WLAN Antenna Spec Annex 1---2-6 Environment treatment Photo

NFC Antenna information：

The total length of the NFC antenna coil is 260mm.

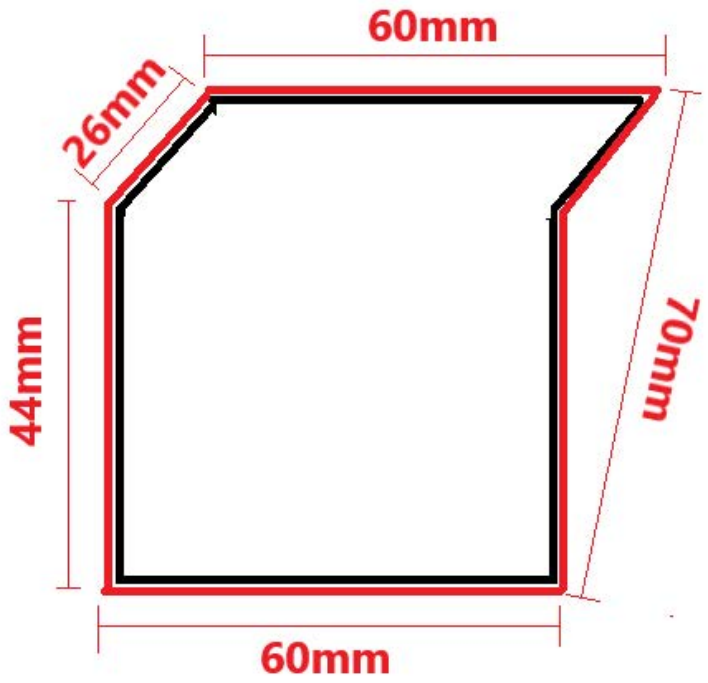

3. Mechanical Specification

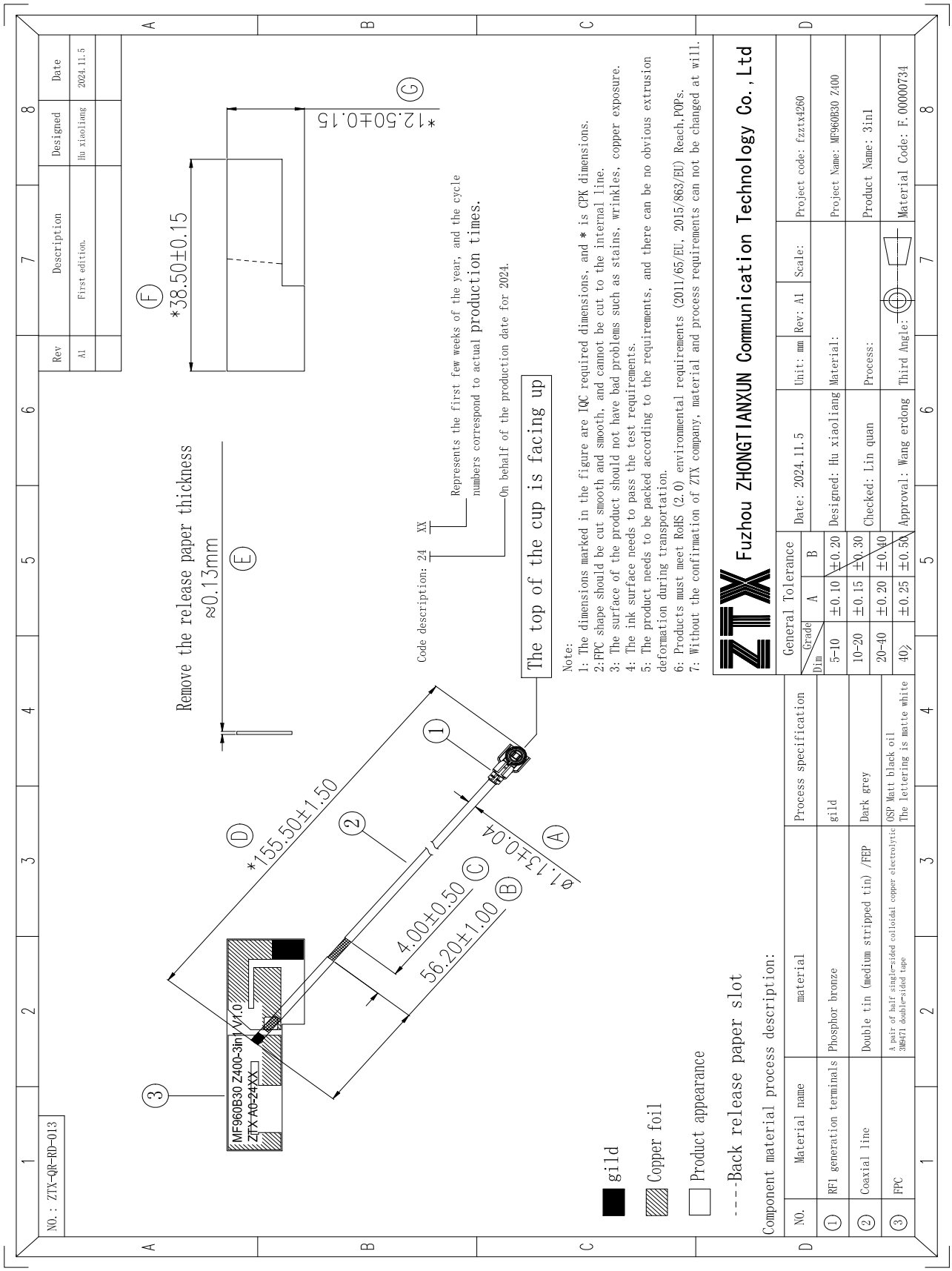

4.The packing way

SOP

Fuzhou ZHONGTIANXUN Communication Technology Co.,Ltd

product name	Product number	Process number/name	version	File Number
3in1	MF960B30 Z400	package	A1	ZTX-QD-WI-023

Operation method & operation parameters (after self-checking the operation of the procedure is qualified, it can flow into the next procedure)

1. Confirm the quantity of 50pcs products with rubber bands;
2. Put 50pcs of products into PE open bag, attach small label, fill in product name, material number, quantity, cycle and other information;
3. Put it into a large bag, pack it in a PE sealed bag, stick a small label, fill in the product name, material number, quantity, cycle and other information;
4. Pack the container and attach a handwritten inspection report;
5. The label is affixed to the upper right corner of the outer box, and the contents of the outer label (including: enterprise name, supplier code, customer specification number, production cycle, production batch packaging quantity, supplier code, inspection report, ROHS, etc.);
6. Seal the labeled box with adhesive paper in the shape of "work".

Instrument calibration and requirements:

1. The test equipment must be grounded;
2. After reconnecting the interface or when the connection test is unstable, the instrument needs to be calibrated;
3. When testing the product, make sure that the antenna is suspended and kept away from the human body or metal devices at least 30cm;

Operational protection requirements:

1. Operators need to wear finger cots for operations (special products with cotton gloves);
2. During the testing process, the tested products should be handled with care;
3. When operating the test fixture, use it in strict accordance with the operating specifications to avoid i

6S requirements:

1. Keep the test site clean and tidy, free of dust, water, and oil;
2. The materials are placed neatly and clearly marked.

Note: 1. Whether the customer material code and quantity are correct, the label must be printed by the machine. 2. The contents of the inner label, outer label, shipping report, and delivery note must be consistent.3. If it is a test product or there is a change, the corresponding mark shall be affixed, the mantissa mark shall be affixed to the mantissa box, and the inspection report shall be enclosed.

Formulate	Xiaoliang hu	Review	Ailing yi	Approve
				Wumin zhang

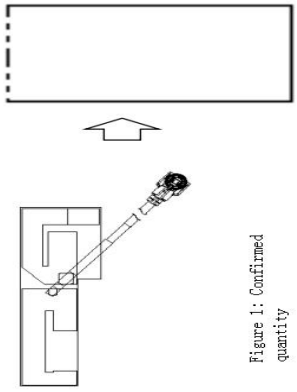

Figure 1: Confirmed quantity

Picture 2: Sealed PE bag packaging/labeling

Figure 4: Packing

Picture 3: Sealed PE bag packaging/labeling

Picture 5: Attach the outer box label/attach shipping inspection report

Figure 6: Sealing