比例：1：1

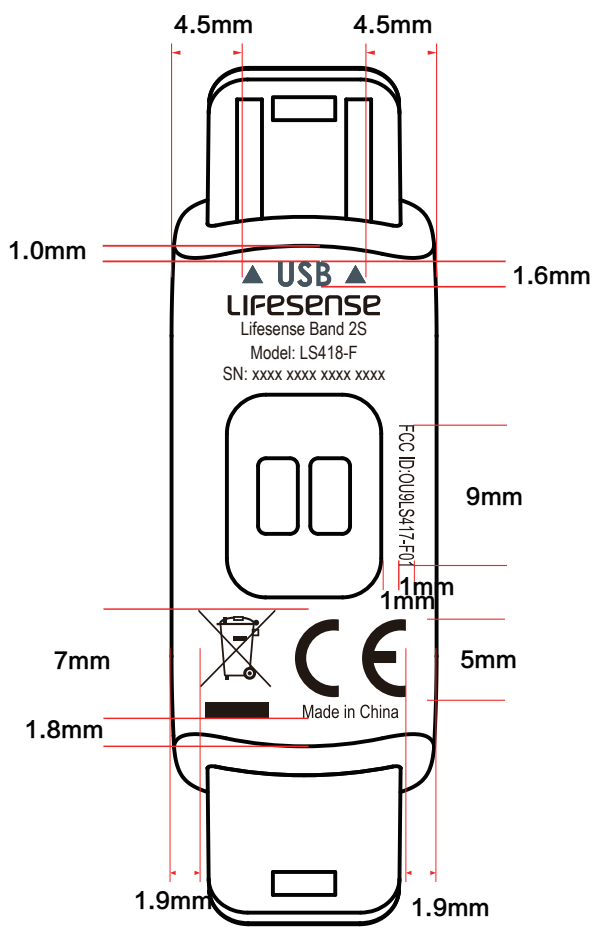
4.5mm
4.5mm
1.0mm
1.6mm
USB
Lifesense
Lifesense Band 2S
Model: LS418-F
SN: xxxx xxxx xxxx xxxx
FCC ID:OU9LS417-F01
9mm
1mm
1mm
7mm
5mm
1.8mm
Made in China
1.9mm
1.9mm

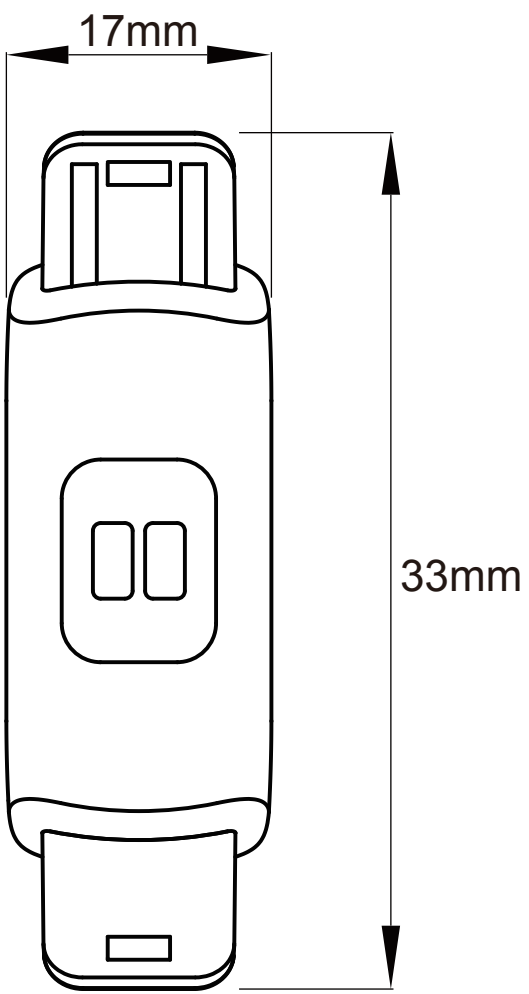
17mm
33mm