Blank Page

Don't Forget To Delete Me!

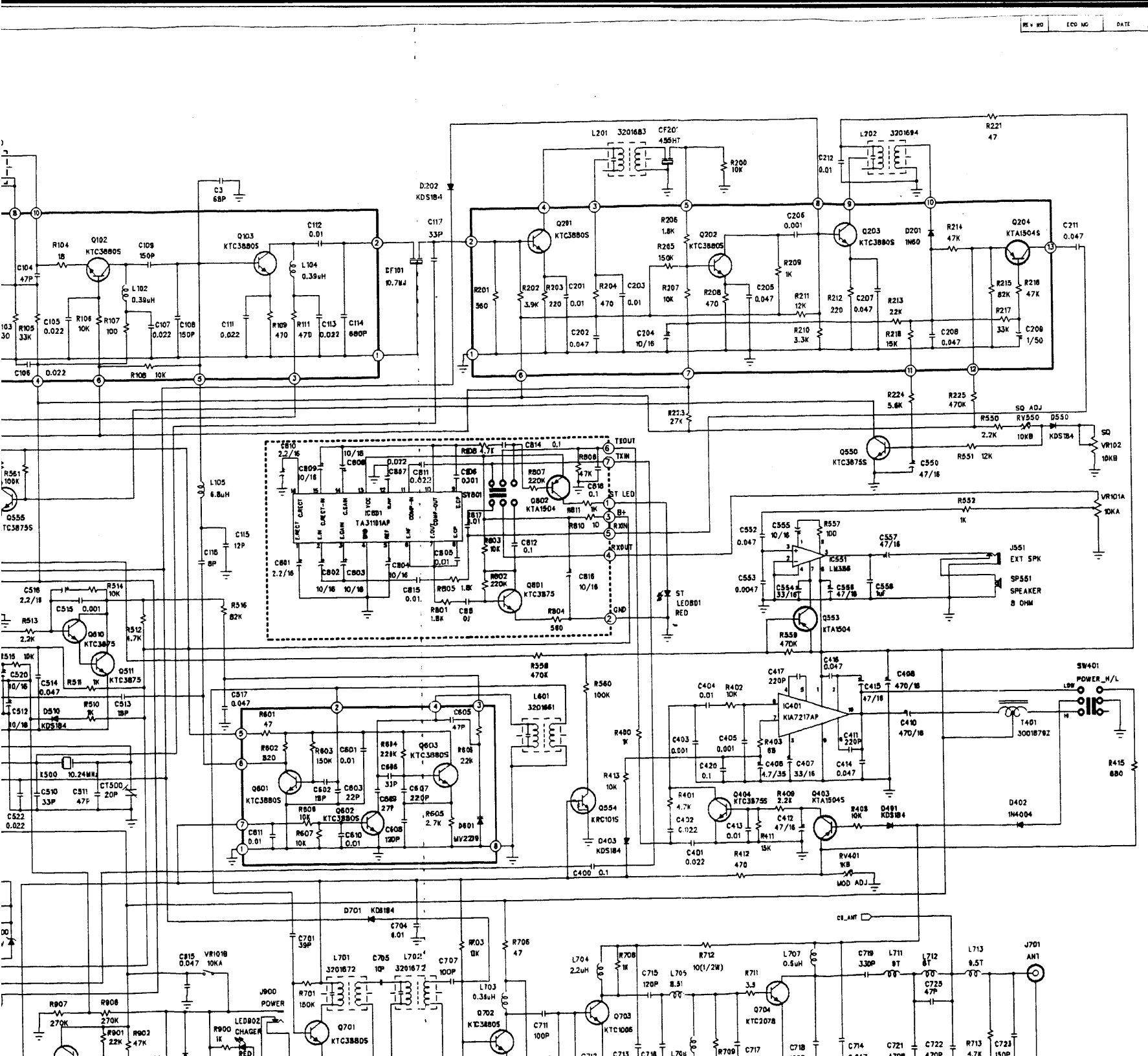
REV NO
ECO NO
DATE
DRAWN
CHECK
CHECK
APPROVED
L201 3201683 CF20' 455HT
L202 3201694
R221 47
R200 10K
C212 0.01
D202 KDS184
C117 33P
C3 68P
Q281 KTC3880S
Q202 KTC3880S
Q203 KTC3880S
Q204 KTA1504S
D201 1N60
R214 47K
C211 0.047
R206 1.8K
R205 150K
C206 0.001
R209 1K
R207 10K
R208 470
C205 0.047
R211 12K
R212 220
C207 0.047
R213 22K
R215 82K
R216 47K
R217 33K
C208 1/50
R218 15K
C208 0.047
R210 3.3K
C204 10/16
C202 0.047
R201 560
R202 3.9K
R203 220
C201 0.01
R204 470
C203 0.01
Q102 KTC3880S
R104 18
C109 150P
C104 47P
L102 0.39uH
R105 33K
C105 0.022
R106 10K
R107 100
C107 0.022
C108 150P
C106 0.022
R108 10K
Q103 KTC3880S
C112 0.01
L104 0.39uH
C111 0.022
R109 470
R111 470
C113 0.022
C114 680P
DF101 10.7MHz
R223 27K
R224 5.6K
R225 470K
SQ ADJ
R550 2.2K
RV550 10KB
D550 KDS184
SQ VR102 10KB
Q550 KTC3875S
C550 47/16
R551 12K
TIOUT
TXIN
ST LED
B+
RXIN
RXOUT
GND
IC601 TA31101AP
Q802 KTA1504
Q801 KTC3875
ST LED601 RED
R552 1K
VR101A 10KA
IC551 LM386
J551 EXT SPK
SP551 SPEAKER 8 OHM
Q553 KTA1504
R559 470K
R558 470K
R560 100K
L601 3201661
Q554 KRC101S
D403 KDS184
IC401 KIA7217AP
SW401 POWER_H/L
T401 3001879Z
D402 1N4004
D401 KDS184
RV401 1KB MOD ADJ
R415 680
Q610 KTC3875
Q511 KTC3875
D510 KDS184
X500 10.24MHz
CT500 20P
Q601 KTC3880S
Q603 KTC3880S
Q602 KTC3880S
MV2209
D701 KDS184
VR1018 10KA
L701 3201672
L702 3201672
Q701 KTC3880S
Q702 KTC3880S
Q703 KTC1006
Q704 KTC2078
L703 0.36uH
L704 2.2uH
L705 8.5T
L707 0.5uH
L711 9T
L712 8T
L713 9.5T
J701 ANT
J900 POWER
LED802 CHARGER
Q901 KTC3880S
R907 270K
R908 270K
R901 22K
R902 47K
R900 1K

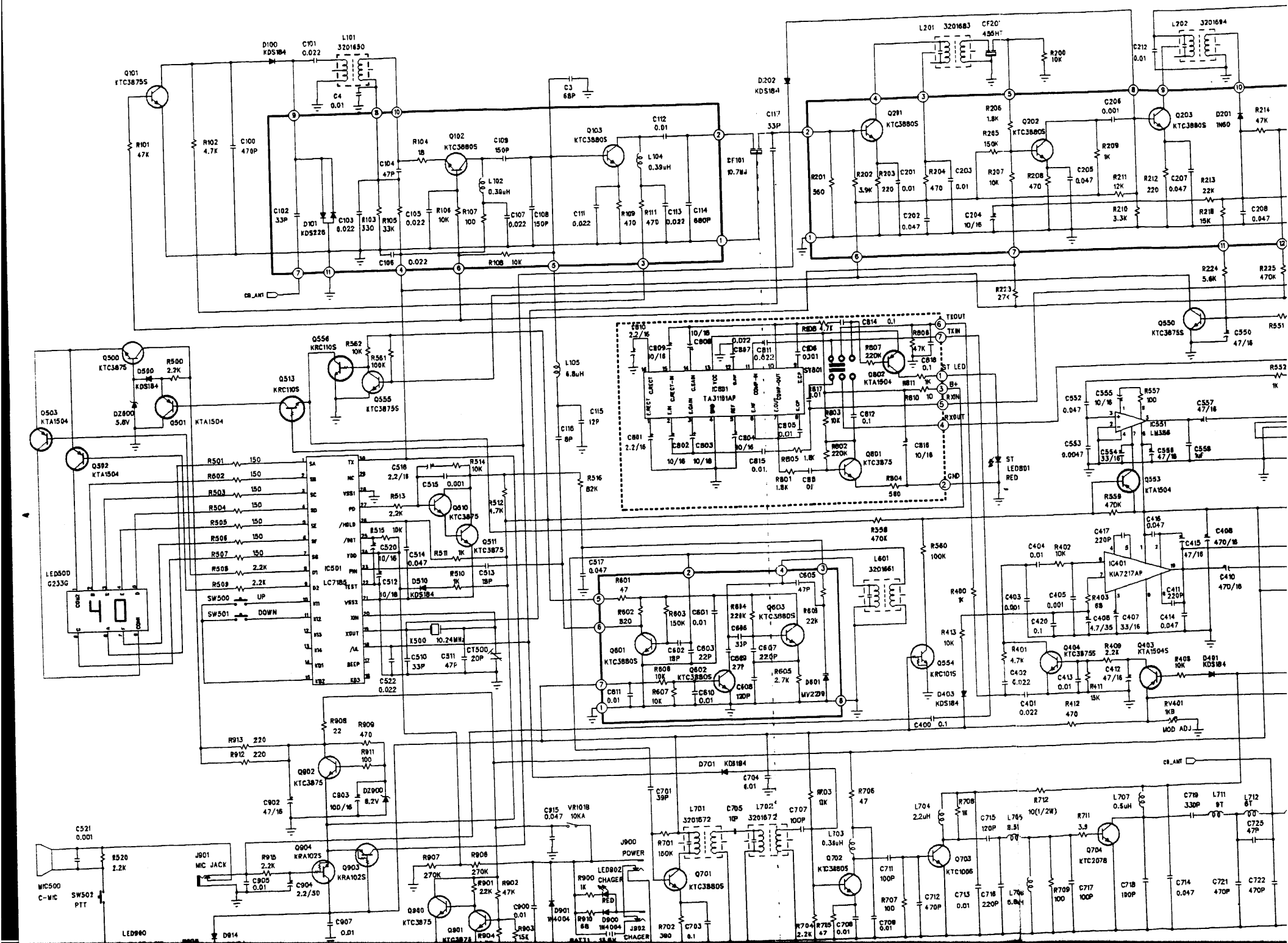
Q101 KTC3875S
D100 KDS184
C101 0.022
L101 3201650
C4 0.01
C3 68P
D202 KDS184
C117 33P
L201 3201683
CF20' 455HT
R200 10K
L202 3201684
C212 0.01
R101 47K
R102 4.7K
C100 470P
R104 18
Q102 KTC3880S
C109 150P
Q103 KTC3880S
C112 0.01
L104 0.39uH
EF101 10.7MJ
Q291 KTC3880S
R206 1.8K
Q202 KTC3880S
C206 0.001
Q203 KTC3880S
D201 1N60
R214 47K
C104 47P
L102 0.39uH
R265 150K
R209 1K
C102 33P
D101 KDS226
C103 0.022
R103 330
R105 33K
C105 0.022
R106 10K
R107 100
C107 0.022
C108 150P
C111 0.022
R109 470
R111 470
C113 0.022
C114 680P
R201 560
R202 3.9K
R203 220
C201 0.01
R204 470
C203 0.01
R207 10K
R208 470
C205 0.047
R211 12K
R212 220
C207 0.047
R213 22K
C202 0.047
C204 10/16
R210 3.3K
R218 15K
C208 0.047
C106 0.022
R108 10K
R224 5.6K
R225 470K
R223 27K
Q550 KTC3875S
C550 47/16
R551
CB_ANT
Q500 KTC3875
R500 2.2K
D500 KDS184
DZ800 5.6V
Q501 KTA1504
Q503 KTA1504
Q592 KTA1504
Q556 KRC110S
R562 10K
R561 100K
Q555 KTC3875S
Q513 KRC110S
L105 6.8uH
C115 12P
C116 8P
R516 82K
TXOUT
TXIN
ST LED
B+
RXIN
RXOUT
GND
IC801 TA31181AP
SY801
Q802 KTA1504
Q801 KTC3875
ST LED801 RED
R532 1K
C552 0.047
C555 10/16
R557 100
C557 47/16
IC551 LM386
C553 0.0047
C554 33/16
C558 47/16
C558 1uF
Q553 KTA1504
R559 470K
R501 150
R502 150
R503 150
R504 150
R505 150
R506 150
R507 150
R508 2.2K
R509 2.2K
SW500 UP
SW501 DOWN
LED500 G233G
IC501 LC7185
C518 2.2/16
R514 10K
C515 0.001
Q510 KTC3875
R513 2.2K
R512 4.7K
R515 10K
C520 10/16
C514 0.047
R511 1K
Q511 KTC3875
C512 10/16
D510 KDS184
R510 1K
C513 18P
X500 10.24MHz
C510 33P
C511 47P
CT500 20P
C522 0.022
R558 470K
R560 100K
L601 3201661
C517 0.047
R601 47
R602 820
R603 150K
C601 0.01
R614 220K
Q603 KTC3880S
C605 47P
R612 22K
C606 33P
C609 27P
C607 220P
Q601 KTC3880S
C602 18P
C603 22P
R608 10K
Q602 KTC3880S
R605 2.7K
C608 120P
D601 MV2209
C611 0.01
R607 10K
C610 0.01
R480 1K
R413 10K
Q554 KRC101S
D403 KDS184
C400 0.1
C416 0.047
C417 220P
C404 0.01
R402 10K
IC401 KIA7217AP
C415 47/16
C408 470/16
C410 470/16
C411 220P
C403 0.001
C405 0.001
R403 68
C420 0.1
C406 4.7/35
C407 33/16
C414 0.047
R401 4.7K
Q404 KTC3875S
R409 2.2K
Q403 KTA1504S
R408 10K
D401 KDS184
C402 0.022
C413 0.01
R411 15K
C412 47/16
C401 0.022
R412 470
RV401 1KB
MOD ADJ
R908 22
R909 470
R913 220
R912 220
Q902 KTC3875
R911 100
C903 100/16
DZ900 8.2V
C902 47/16
D701 KDS184
C704 0.01
C715 120P
L705 8.5T
R712 10(1/2W)
L707 0.5uH
R711 3.9
C719 330P
L711 9T
L712 6T
C725 47P
C521 0.001
R520 2.2K
J901 MIC JACK
MIC500 C-MIC
SW502 PTT
R915 2.2K
Q904 KRA102S
Q903 KRA102S
C905 0.01
C904 2.2/50
R907 270K
R908 270K
R901 22K
R902 47K
C900 0.01
R903 15K
Q940 KTC3875
Q901 KTC3875
R904
C907 0.01
LED940
D914
C915 0.047
VR1018 10KA
J900 POWER
LED902 CHAGER
R900 1K
RED
R910 68
D900 1N4004
J902 CHAGER
D901 1N4004
L701 3201672
C705 10P
L702 3201672
C707 100P
R703 10K
R706 47
L703 0.36uH
Q701 KTC3880S
R701 150K
Q702 KTC3880S
R702 390
C703 0.1
C711 100P
R707 100
C709 0.01
R704 2.2K
R715 47
C708 0.01
L704 2.2uH
R708 1K
Q703 KTC1006
C712 470P
C713 0.01
C718 220P
L706 6.8uH
R709 100
C717 100P
C718 190P
C714 0.047
C721 470P
C722 470P

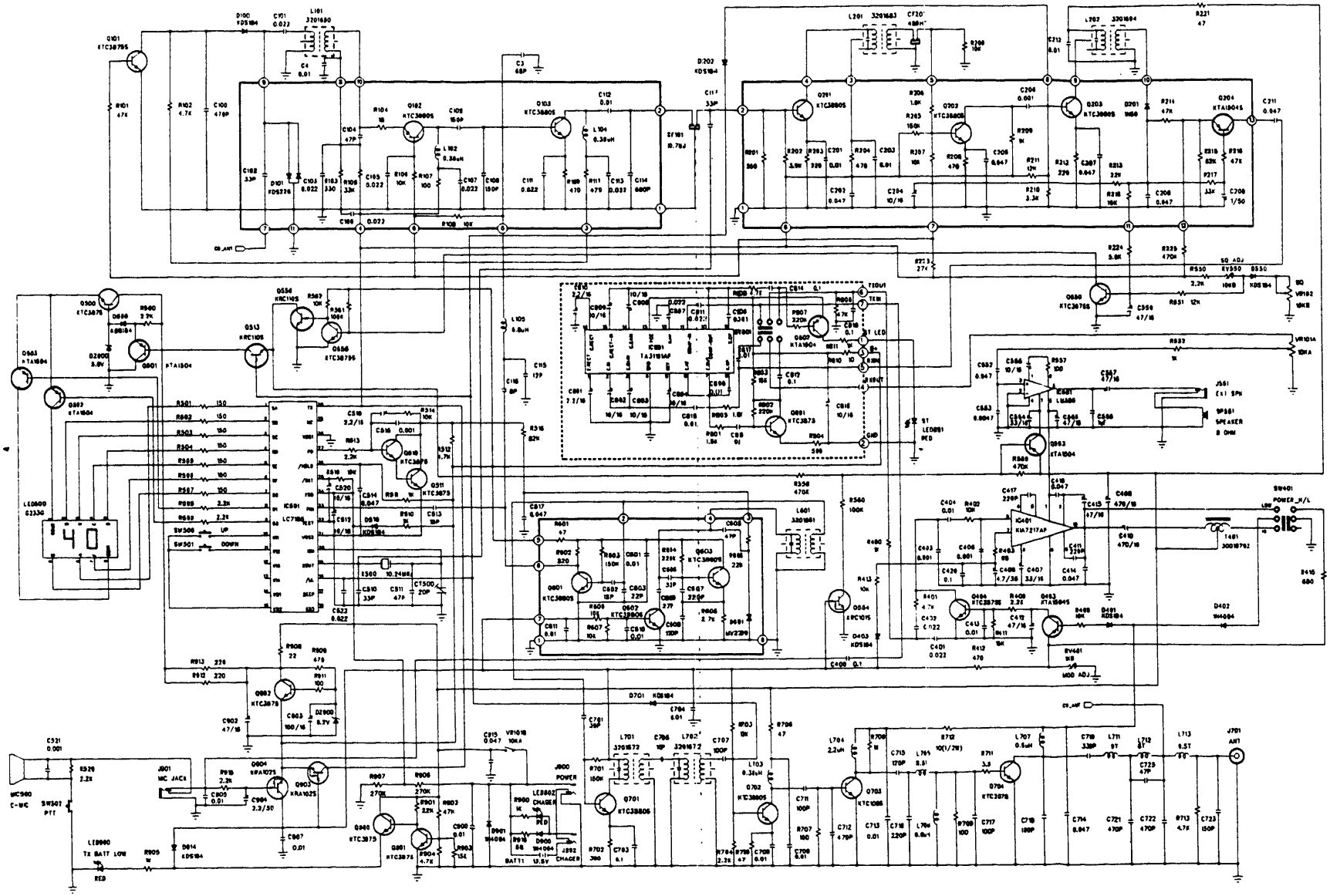
IC501
LC7536
IC401
KIA7217AP
IC601
TA31136AF
Q601
KTC3880E
Q603
KTC3880E
Q602
KTC3880E
Q701
KTC3880E
Q702
KTC3880E
Q703
KTC1066
Q704
KTC3878
Q201
KTC3880E
Q202
KTC3880E
Q203
KTC3880E
Q204
KTA15045
Q101
KTC3879S
Q102
KTC3880E
Q103
KTC3880E
Q501
KTA1504
Q502
KTA1504
Q503
KTA1504
Q504
KTC1015
Q401
KTC3878
Q402
KTA15045
Q403
KTC3878
Q404
KTC3878
Q501
KTC3878
Q502
KTC3878
Q503
KTA1504
Q511
KTC3879
Q512
KTC3879
Q601
KTC3878
Q602
KTC3878
Q603
KRA1025
Q604
KRA1025
Q801
KTC3878
Q802
KTC3875
Q901
KTA1504
Q902
KTC3878
Q903
KRA1025
Q904
KRA1025
Q940
KTC3875
Q950
KTC3878
Q951
KTC3878
Q952
KTA1504
Q953
KTA1504
Q954
KTA1504
Q955
KTA1504
Q956
KTC3879S
Q957
KTC3879S
Q958
KTC3879S
Q959
KTC3879S
Q960
KTC3879S
Q961
KTC3879S
Q962
KTC3879S
Q963
KTC3879S
Q964
KTC3879S
Q965
KTC3879S
Q966
KTC3879S
Q967
KTC3879S
Q968
KTC3879S
Q969
KTC3879S
Q970
KTC3879S
Q971
KTC3879S
Q972
KTC3879S
Q973
KTC3879S
Q974
KTC3879S
Q975
KTC3879S