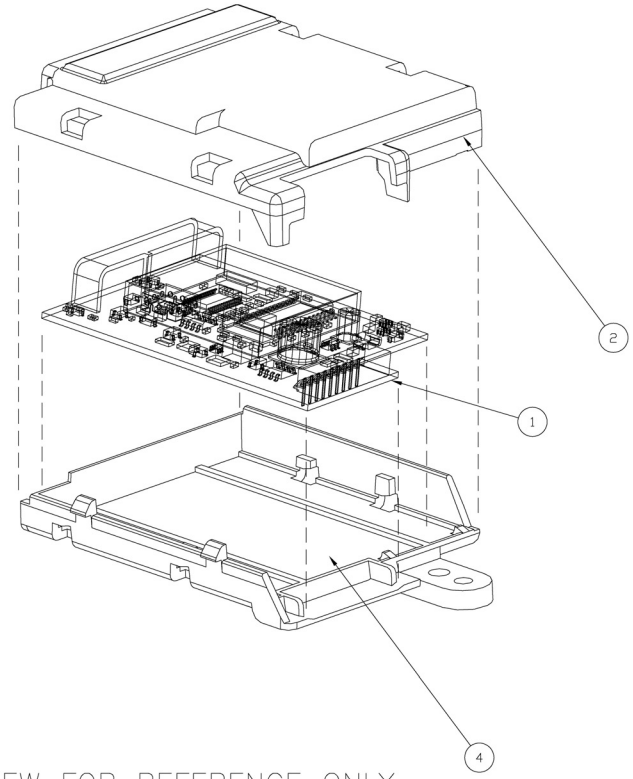

VIEW FOR REFERENCE ONLY

NOTES:

1. REFERENCE IPC-A-610 STANDARDS FOR ASSEMBLY PRACTICES AND PROCEDURES, UNLESS OTHERWISE SPECIFIED.
2. ENCLOSE ELECTRONICS IN HOUSINGS (ITEMS 2 AND 4).
3. PLACE BARCODE/PATENT LABEL ITEM 3 OUTSIDE OF HOUSING IN AREA INDICATED.
4. ALL COMPONENTS MUST MEET SPECIFICATIONS CALLED OUT ON COMPONENT LEVEL DRAWINGS.
5. ASSEMBLER IS TO PRINT LABEL INFORMATION AS SHOWN, USING ADHESIVE LABEL (ITEM 3).
6. CHARACTER HEIGHT OF THE "TOYOTA" AND THE TOYOTA PART NUMBER SHALL BE .050 [1.27].
7. REFER TO LATEST REVISION OF DRAWING VJ0245 FOR ACTUAL PATENT NUMBERS FOR THE PATENT GROUP IDENTIFIED.
8. LAY OUT PATENT NUMBERS TO FILL SPACE AVAILABLE, BUT NATION / ORGANIZATION OF ORIGIN HEADINGS MUST BE MAINTAINED FOR CORRESPONDING PATENT NUMBERS AS SHOWN ON LATEST REVISION OF DRAWING VJ0245.
9. ASSEMBLY MUST COMPLY TO TEST SPECIFICATION TDE-ELE-100.

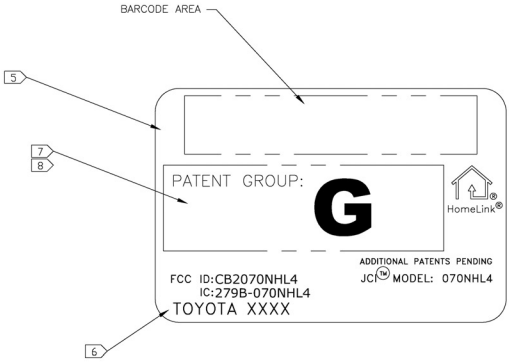

PART NUMBER: 1433960 REVISION 1

MANUALLY ASSEMBLED PARTS:

LOCATION	DESCRIPTION	PART#	QTY	PACKAGE
1	PCB ASM 070N HOMELINK	1433961-1	1	TH_FAKEPART
2	HOUSING, 070N HMLK UPR	VG2263-B	1	TH_FAKEPART
3	LABEL STOCK 1.0 X 1.5	VJ6846	1	TH_FAKEPART
4	HOUSING, 070N HMLK LWR	VG2264-B	1	TH_FAKEPART

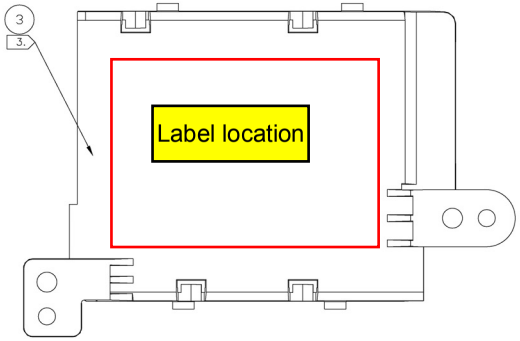

REVISION BLOCK

REV	SU/ ZONE	DESCRIPTION	P.C.N.	BY	DATE	BY
A		RELEASE FOR PROTOTYPE	1955933	L&T	08MAY06	EDICT
1		RELEASE FOR PRODUCTION 1433961-1 WAS 1433961-A (1)	2156862	BS	13JUN06	EDICT

ELECTRONICS STD. UNLESS OTHERWISE SPECIFIED

THIRD ANGLE PROJECTION IAW ANSI Y14.5M 1982

DO NOT SCALE

X.X DECIMAL ± .5 [.020]
X.XX DECIMAL ± .15 [.006]
ANGULAR ± 2° 0'
DRAFT ANGLES NOTED

DIMENSIONS ARE IN MILLIMETERS WITH EQUIVALENT INCHES SHOWN IN BRACKETS.

SUBSTANCE USE RESTRICTION: THE GLOBAL AUTOMOTIVE DECLARABLE SUBSTANCES LIST (SEE HTTP://WWW.GADSL.ORG) REGARDING PROHIBITED AND DECLARABLE SUBSTANCES APPLIES TO ALL MATERIALS USED IN THIS PART.

JOHNSON CONTROLS
AUTOMOTIVE SYSTEMS GROUP INTERIORS

NAME: ELECTRONIC ASSEMBLY

PROJECT: 07 070N HMLK IV
DRWN. BY: L & T — DATE: 08MAY06
CHKD. BY: K. VAN LIERE — DATE: 08MAY06
ENGR. APPR: C. WERNICKE — DATE: 08MAY06
CUSTOMER: TOYOTA
SCALE: NONE — SHEET 1 OF 1
SIZE: D — TOOL NO. REF. — DATA FORMAT: ACAD
DWG. NO.: 1433960 — REV.: 1

RELEASED - JCI CONFIDENTIAL