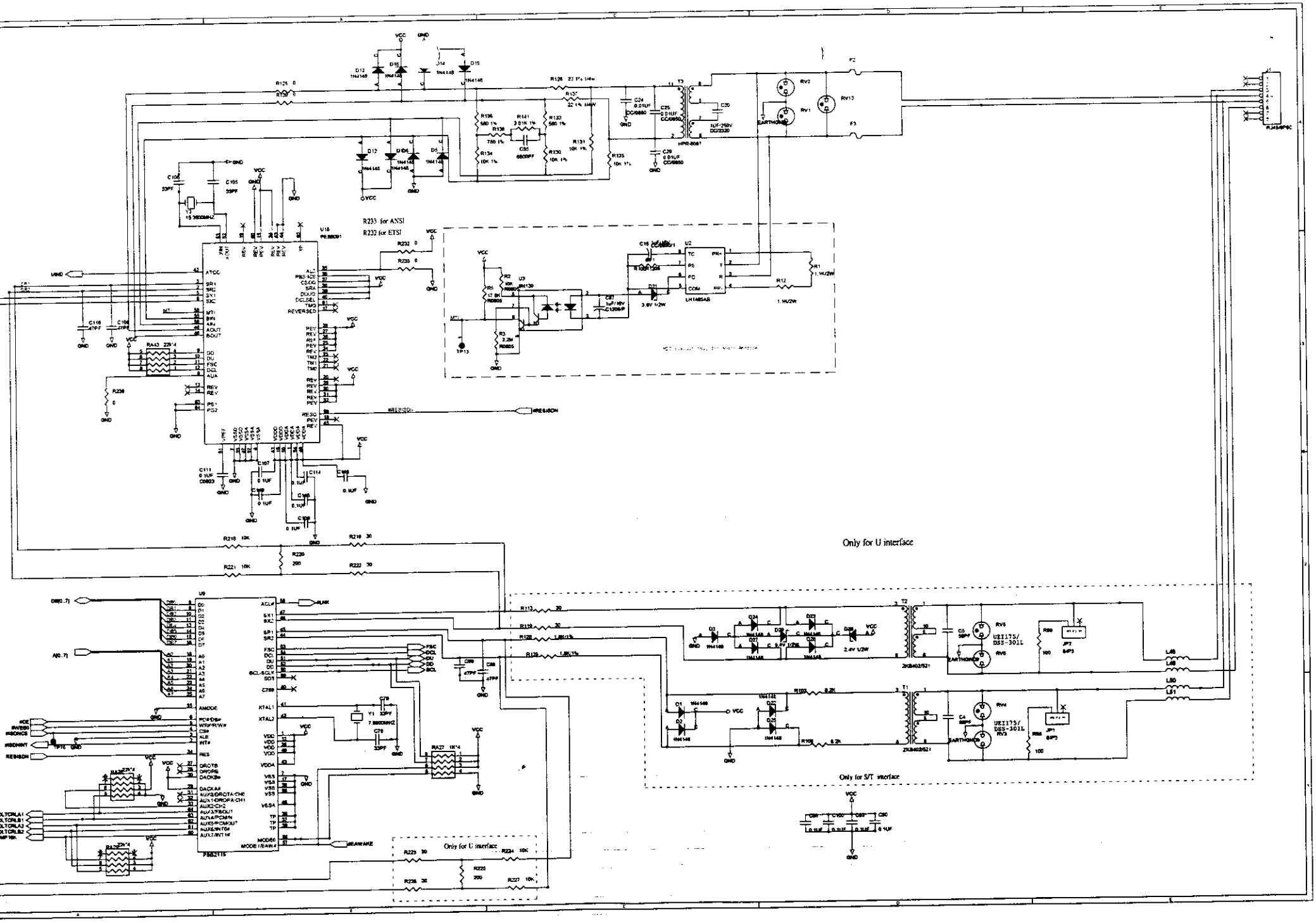
R233 for ANSI
R232 for ETSI
Only for U interface
Only for S/T interface
Only for U interface
U16
PEB8091
U9
PSB2115
U2
LH1485AB
T3
HPR-8087
T2
2KB402/521
T1
2KB402/521
UEI175/
DSS-301L
RJ45/8P8C

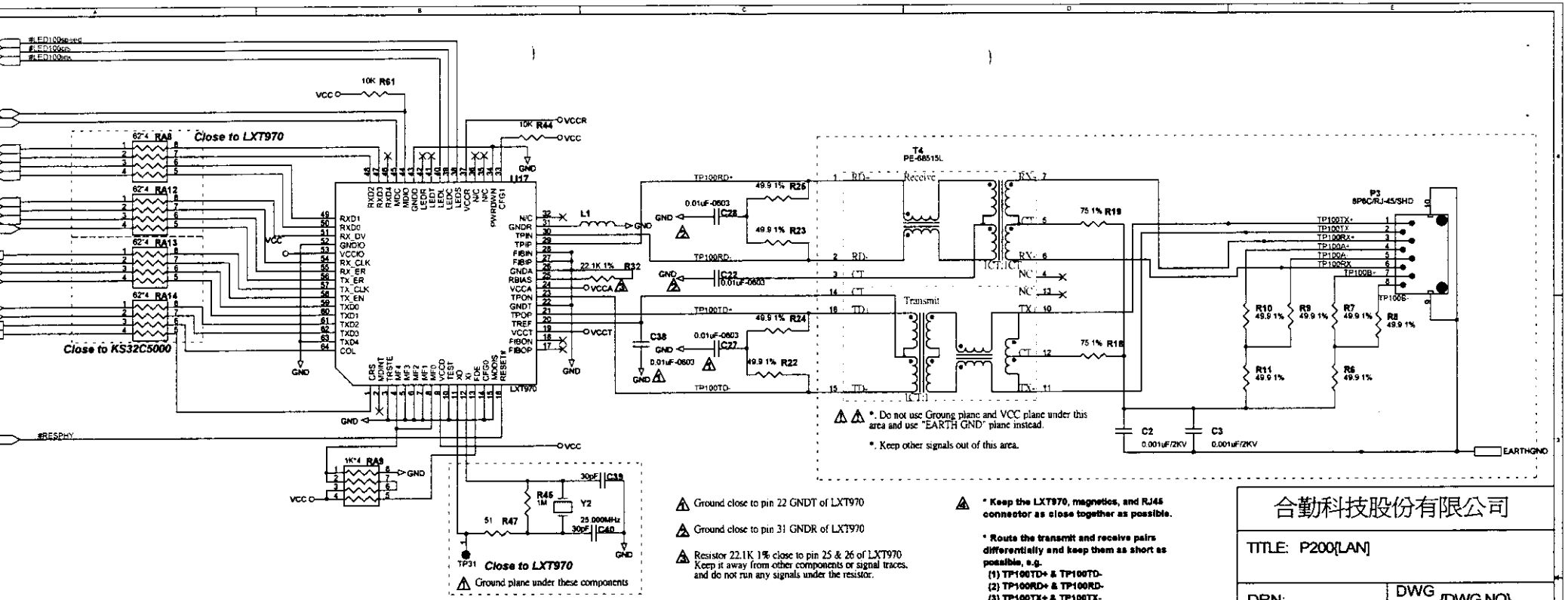

* Keep the LXT970, magnetics, and RJ45 connector as close together as possible.

* Route the transmit and receive pairs differentially and keep them as short as possible, e.g.
  (1) TP100TD+ & TP100TD-
  (2) TP100RD+ & TP100RD-
  (3) TP100TX+ & TP100TX-
  (4) TP100RX+ & TP100RX-
  (5) TP100T+ & TP100T-
  (6) TP100R+ & TP100R-
  (7) TP100A+ & TP100A-
  (8) TP100B+ & TP100B-

* Route traces over an unbroken ground plane. Do not route over breaks in the ground plane.

* Provide shielding by placing a ground plane under TPOP and TPON and the magnetics. Place the shielding ground plane two to three layers away to minimize shunt capacitance between the traces and the ground plane.

合勤科技股份有限公司

TITLE: P200[LAN]	
DRN:	DWG NO: {DWG NO}
CKD:	REV: A0
APPD:	SHEET 5 OF 9

Amendment History

Date	Release	Description
09/14/1998	A0	Sample Run Release

Section CPU & buffers

Size	Document Number	Rev
Custom	P200x.dsn	A0
Date: Friday, June 25, 1999	Sheet 15 of 9	

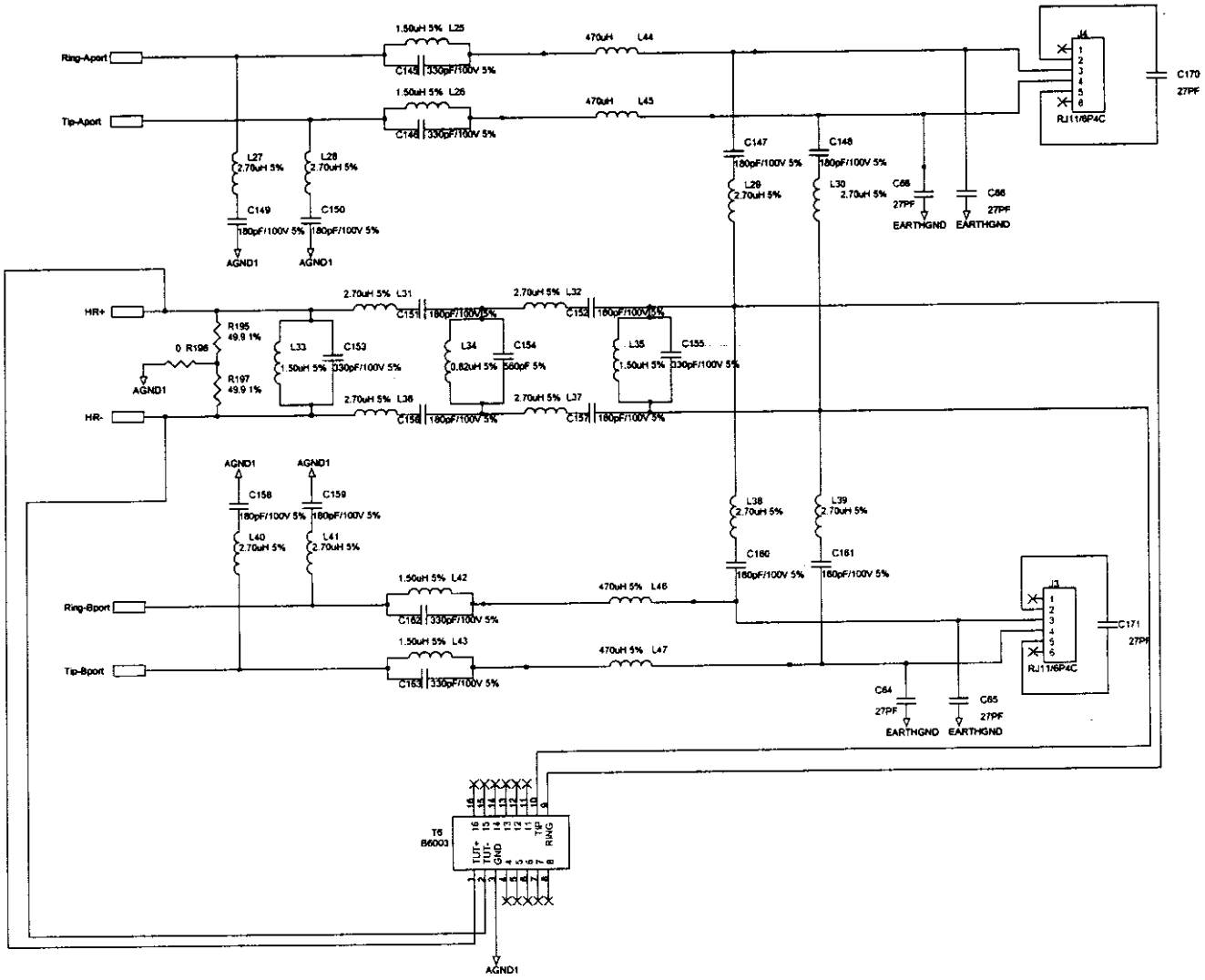

合勤科技股份有限公司

TITLE: P200(Phone Line)

DRN:	DWG NO: {DWG NO}
CKD:	REV: A0
APPD:	SHEET OF

Amendment History

Date	Release	Description
09/14/1998	A0	Sample Run Release

Section CPU & buffers

Size	Document Number	Rev
C	P200x.dsn	A0

Date: Friday, June 25, 1999 Sheet 15 of 9

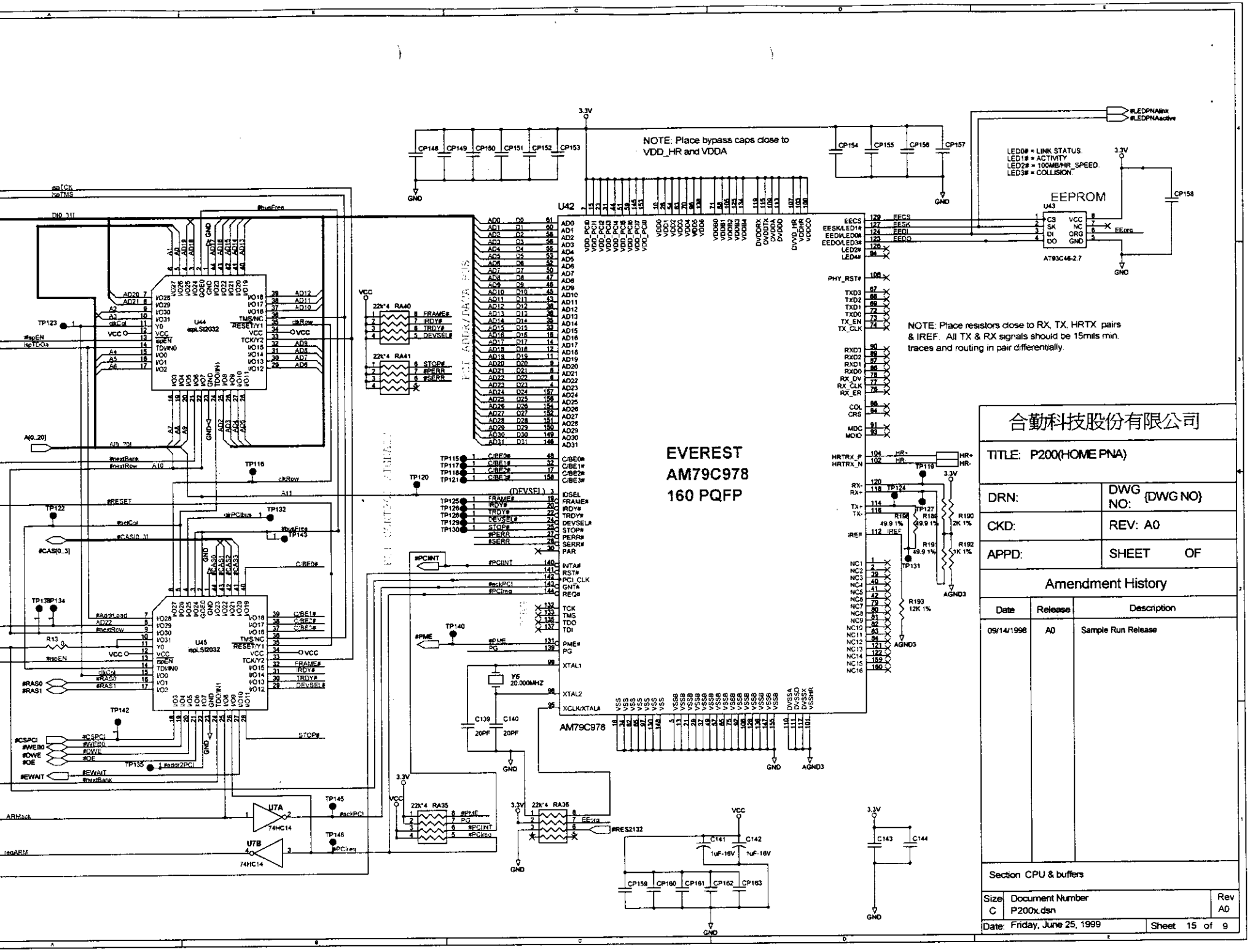
NOTE: Place bypass caps close to VDD_HR and VDDA
NOTE: Place resistors close to RX, TX, HRTX pairs & IREF. All TX & RX signals should be 15mils min. traces and routing in pair differentially.
LED0# = LINK STATUS
LED1# = ACTIVITY
LED2# = 100MB/HR_SPEED
LED3# = COLLISION
EEPROM
U43
AT93C46-2.7
U42
EVEREST
AM79C978
160 PQFP
AM79C978
U44
ispLSI2032
U45
ispLSI2032
U7A
74HC14
U7B
74HC14
Y6
20.000MHZ
合勤科技股份有限公司
TITLE: P200(HOME PNA)
DRN:
DWG NO: {DWG NO}
CKD:
REV: A0
APPD:
SHEET OF
Amendment History
Date
Release
Description
09/14/1998
A0
Sample Run Release
Section CPU & buffers
Size C
Document Number P200x.dsn
Rev A0
Date: Friday, June 25, 1999
Sheet 15 of 9

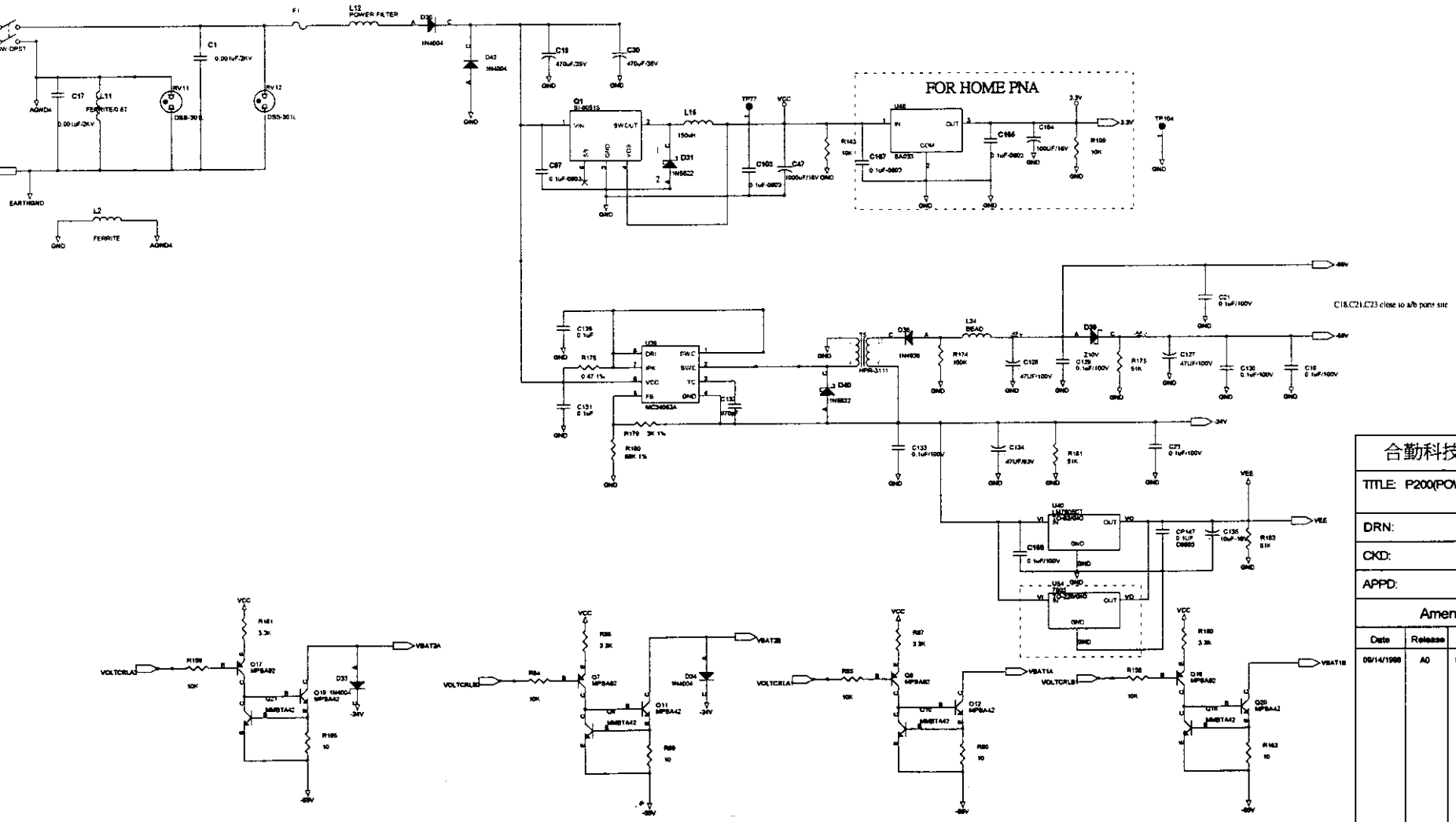

合勤科技股份有限公司

TITLE: P200(POWER)

DRN:	DWG NO: {DWG NO}
CKD:	REV: A0
APPD:	SHEET OF

Amendment History

Date	Release	Description
09/14/1998	A0	Sample Run Release

Section CPU & buffers

Size	Document Number	Rev
	Cute/P200x.dsn	A0
Date: Friday, June 25, 1999	Sheet 15 of 9	

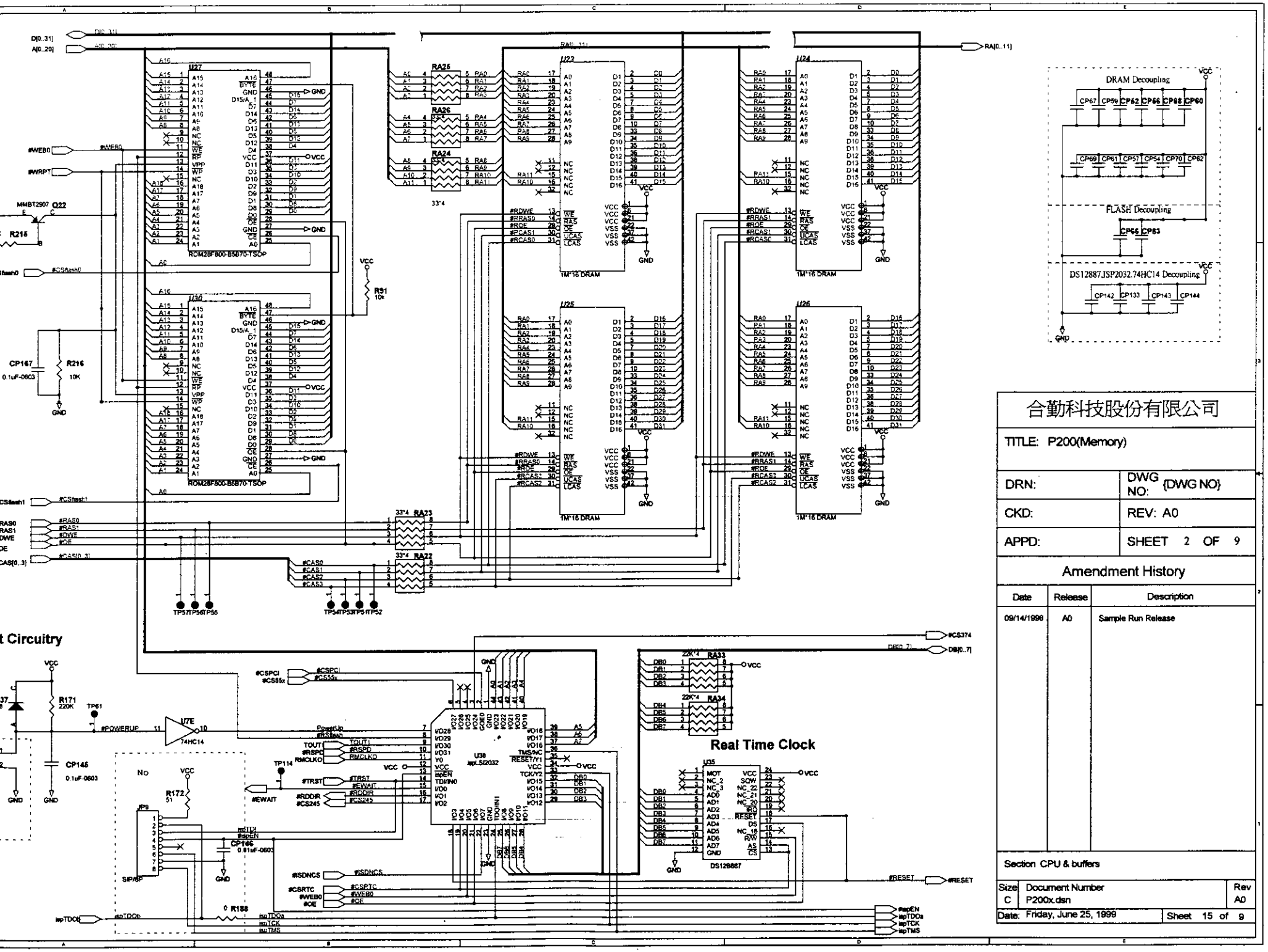
DRAM Decoupling
FLASH Decoupling
DS12887,JSP2032,74HC14 Decoupling
Real Time Clock
Circuitry
ROM28F800-B5B70-TSOP
1M*16 DRAM
DS12887
合勤科技股份有限公司
TITLE: P200(Memory)
DRN:
DWG NO: {DWG NO}
CKD:
REV: A0
APPD:
SHEET 2 OF 9
Amendment History
Date
Release
Description
09/14/1998
A0
Sample Run Release
Section CPU & buffers
Size C
Document Number P200x.dsn
Rev A0
Date: Friday, June 25, 1999
Sheet 15 of 9

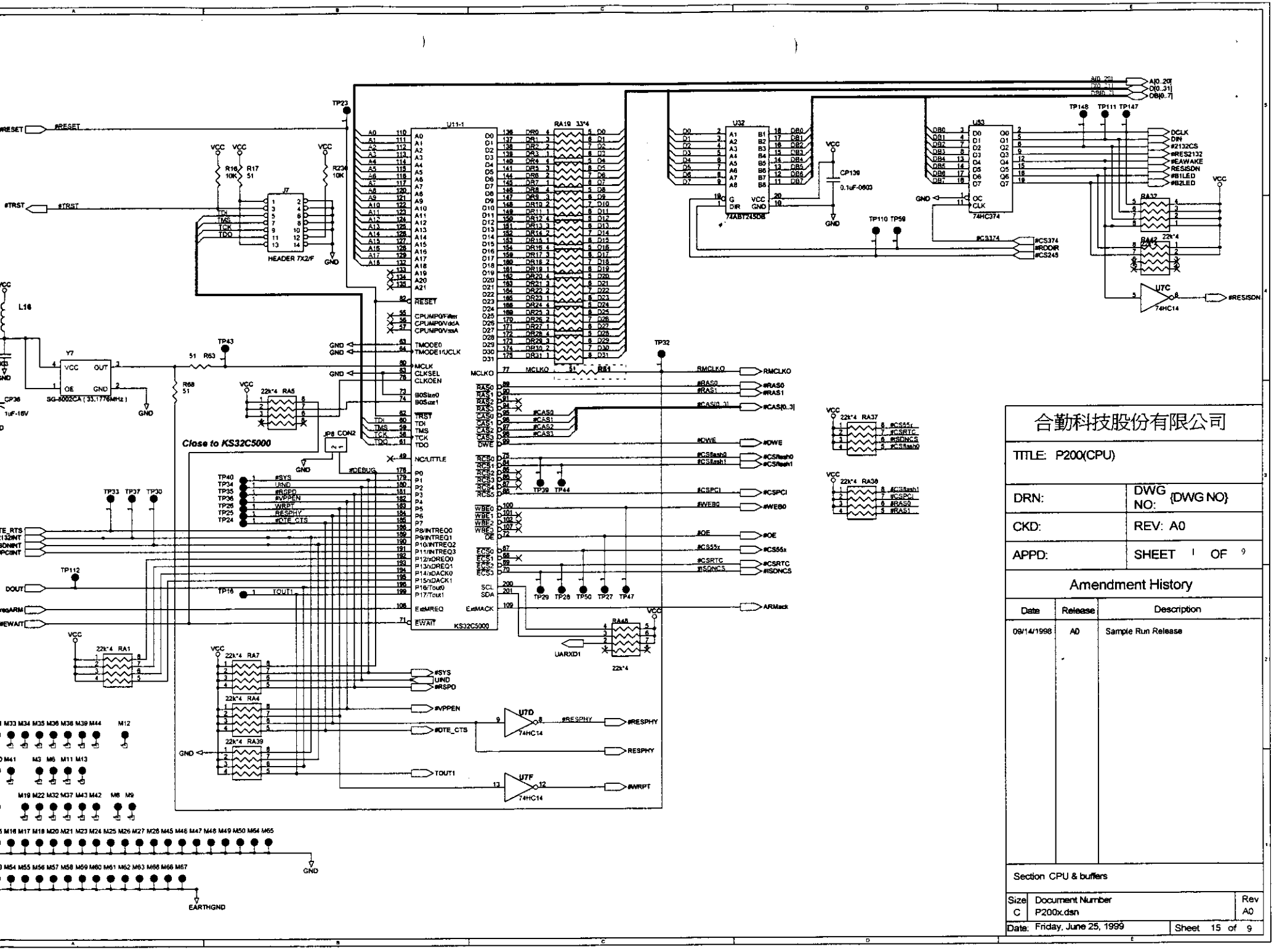

合勤科技股份有限公司

TITLE: P200(CPU)

DRN:	DWG NO: {DWG NO}
CKD:	REV: A0
APPD:	SHEET 1 OF 9

Amendment History

Date	Release	Description
09/14/1998	A0	Sample Run Release

Section CPU & buffers

Size	Document Number	Rev
C	P200x.dsn	A0

Date: Friday, June 25, 1999 Sheet 15 of 9

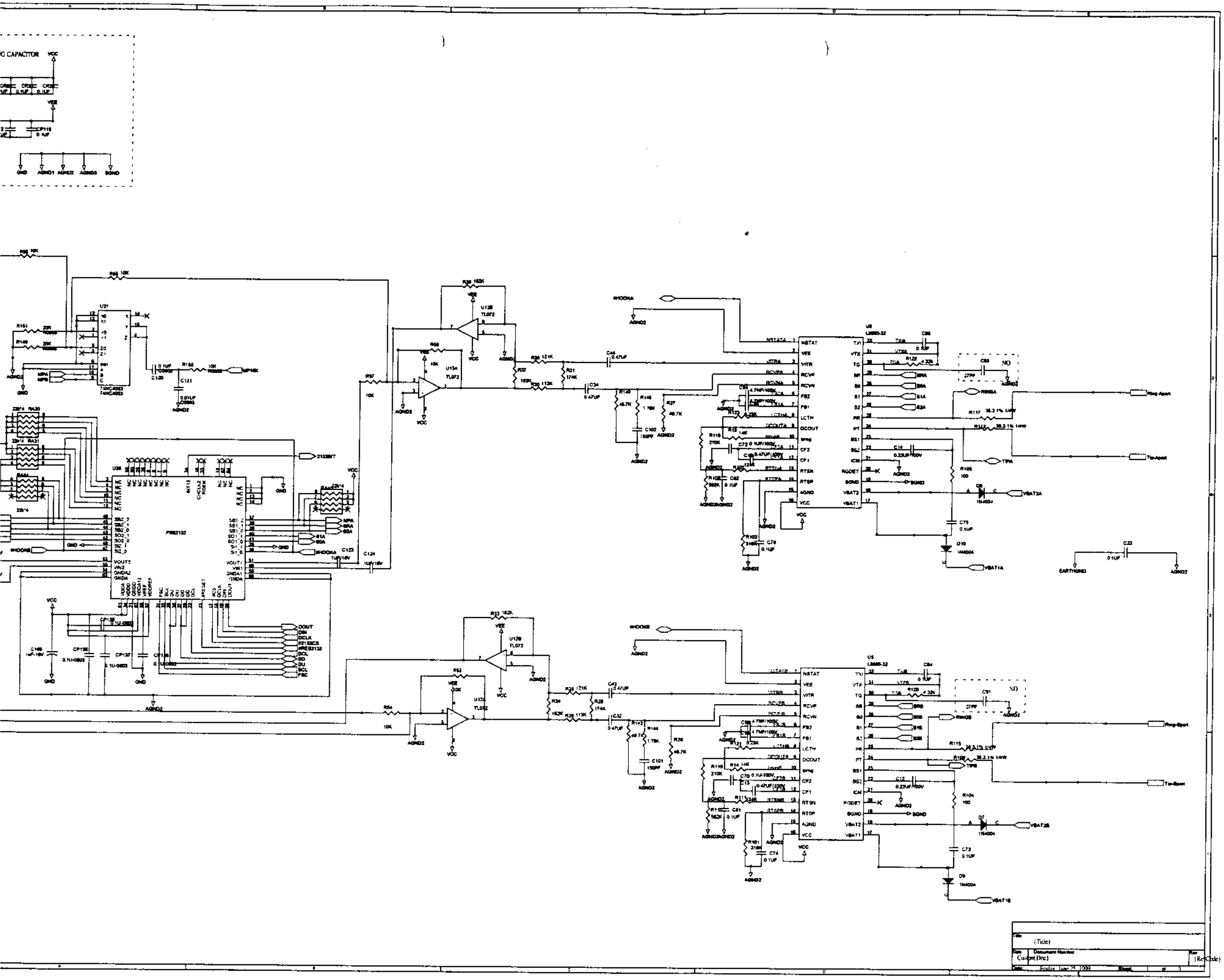

CAPACITOR
VCC
VEE
GND
AGND1
AGND2
AGND3
BGND
U21
74HC4053
PEB2132
U13A
TL072
U13B
U12A
U12B
U6
LM8G-32
U5
HOOKA
HOOKB
Ring-Aport
Tip-Aport
Ring-Bport
Tip-Bport
VBAT1A
VBAT2A
VBAT1B
VBAT2B
EARTHGND
1N4004
NO
DOUT
DIN
DCLK
SCL
(Title)
Document Number
Custom(Doc)

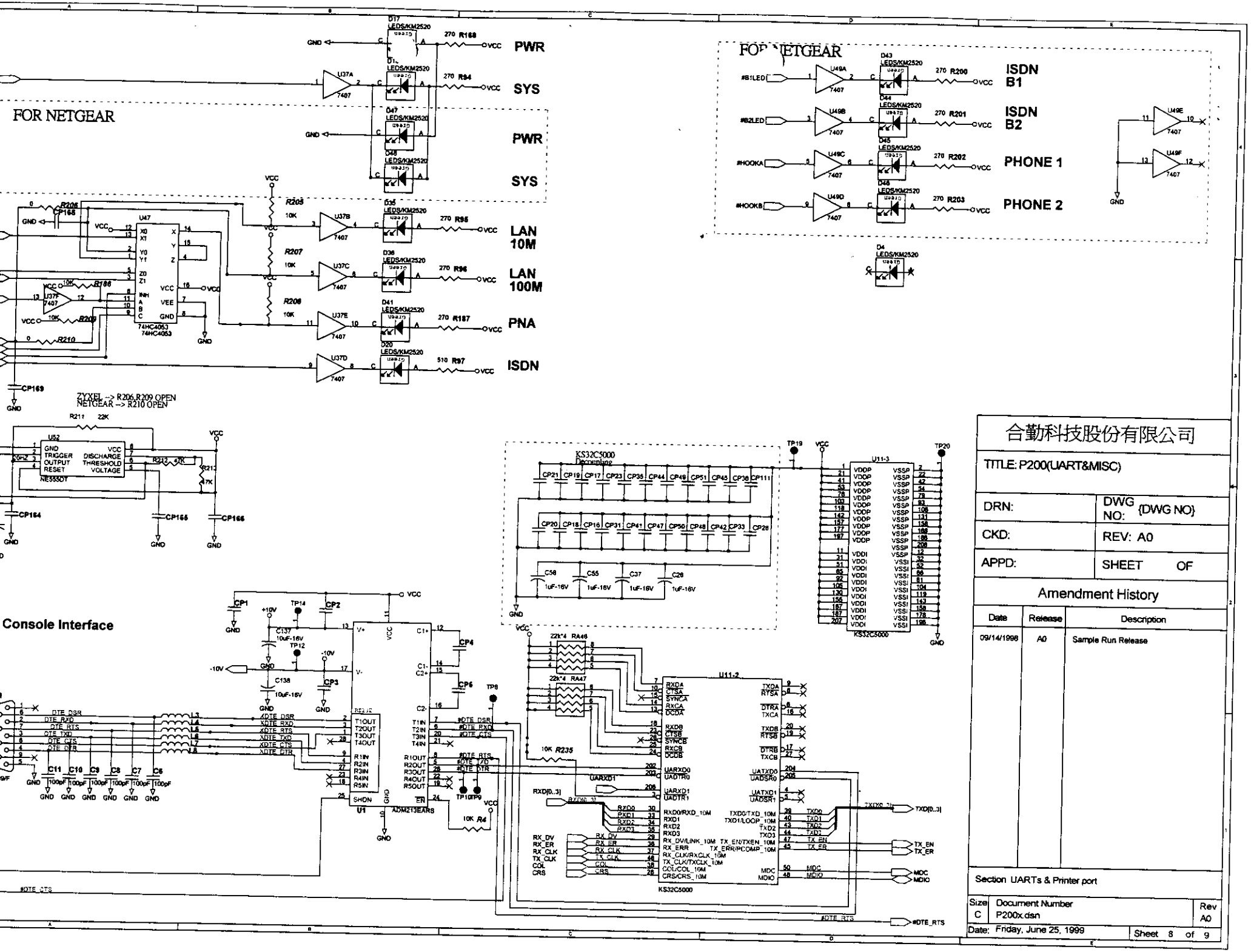
FOR NETGEAR
PWR
SYS
PWR
SYS
LAN 10M
LAN 100M
PNA
ISDN
ISDN B1
ISDN B2
PHONE 1
PHONE 2
ZYXEL --> R206,R209 OPEN
NETGEAR --> R210 OPEN
Console Interface
KS32C5000 Decoupling
合勤科技股份有限公司
TITLE: P200(UART&MISC)
DRN:
DWG NO: {DWG NO}
CKD:
REV: A0
APPD:
SHEET OF
Amendment History
Date
Release
Description
09/14/1998
A0
Sample Run Release
Section UARTs & Printer port
Size C
Document Number P200x.dsn
Rev A0
Date: Friday, June 25, 1999
Sheet 8 of 9