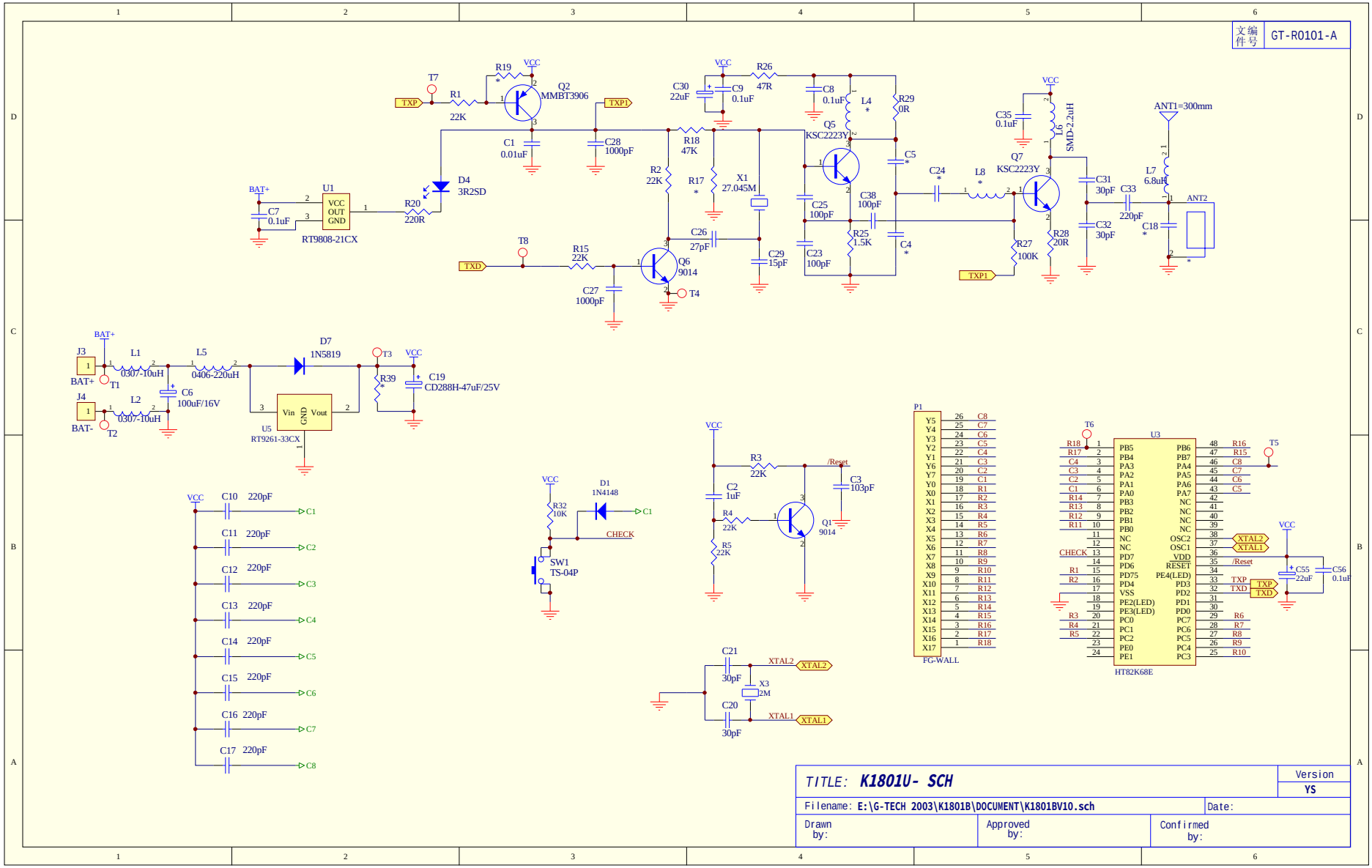

PDF created with FinePrint pdfFactory trial version http://www.fineprint.com