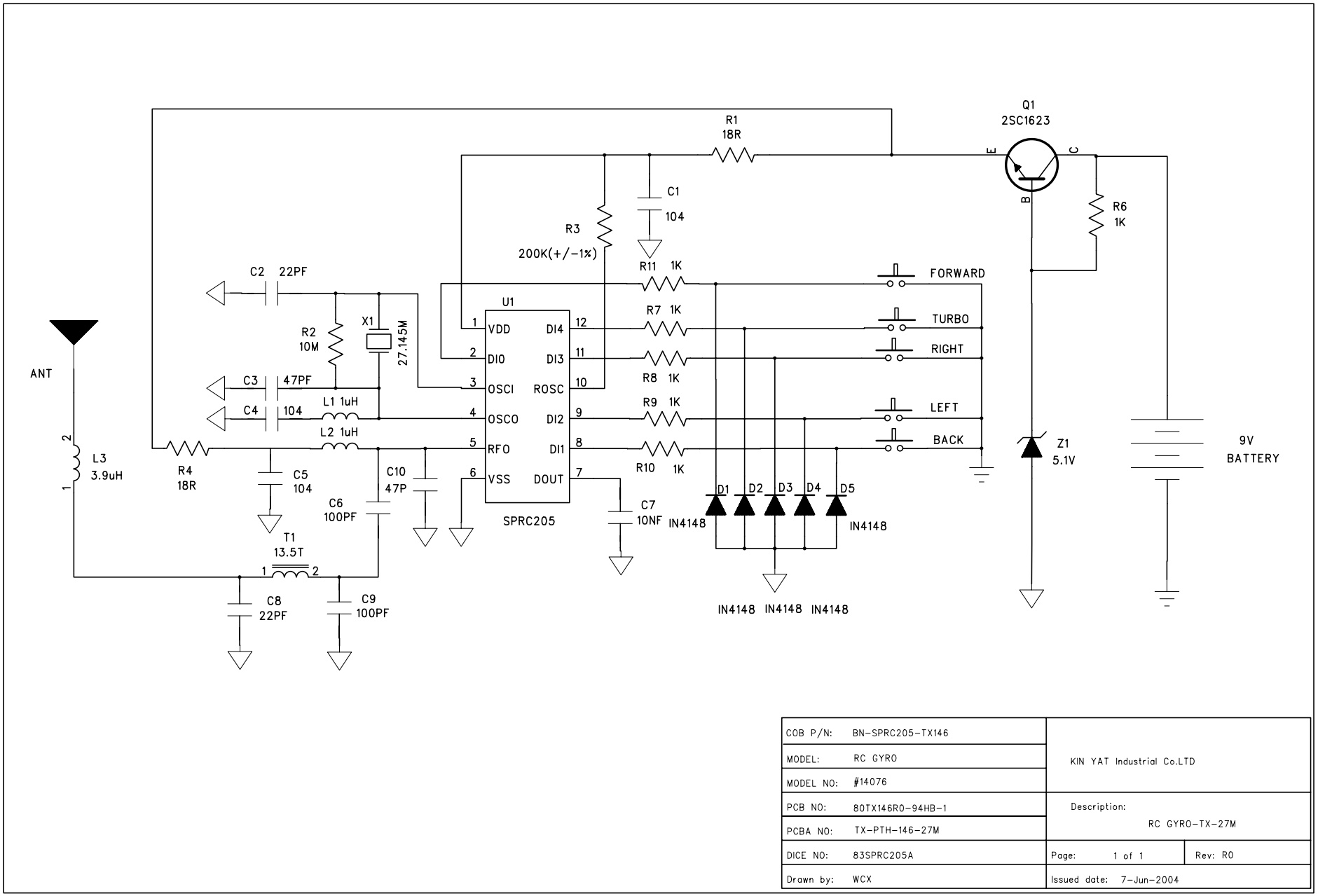

COB P/N:	BN-SPRC205-TX146	KIN YAT Industrial Co.LTD	
MODEL:	RC GYRO		
MODEL NO:	#14076		
PCB NO:	80TX146R0-94HB-1	Description: RC GYRO-TX-27M	
PCBA NO:	TX-PTH-146-27M		
DICE NO:	83SPRC205A	Page: 1 of 1	Rev: R0
Drawn by:	WCX	Issued date: 7-Jun-2004	