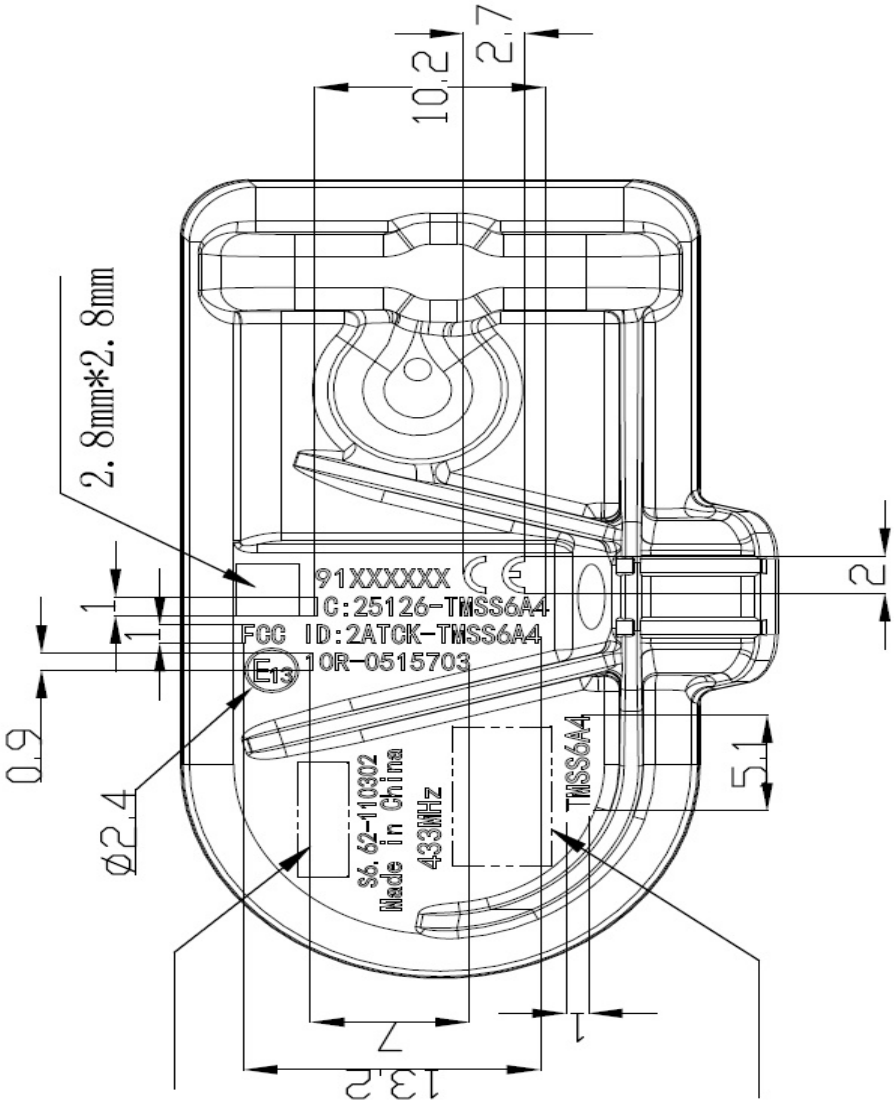

Remark: The product is small to place the FCC statement on the product and it be placed in the user manual which the device is marketed.