FCC Labels
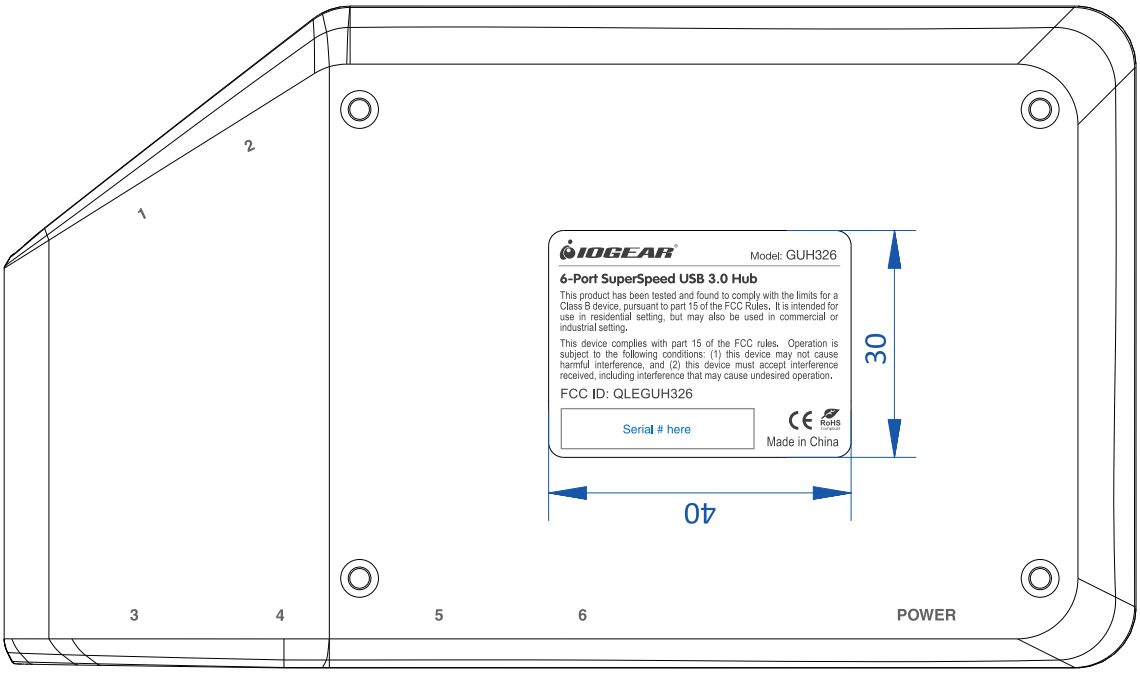
6-Port SuperSpeed USB 3.0 Hub
Model ID: GUH326