TMB-2287-B label P0#2BEB1267

Dimension: 50X15mm, Thickness: 0.05mm

Material: adhesive label with water proof

材质：60#珠光特制胶水+光胶

Colour: 黑色+Pantone Reflex Blue C+底877c
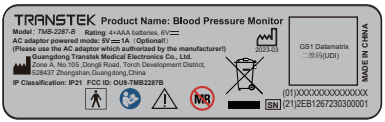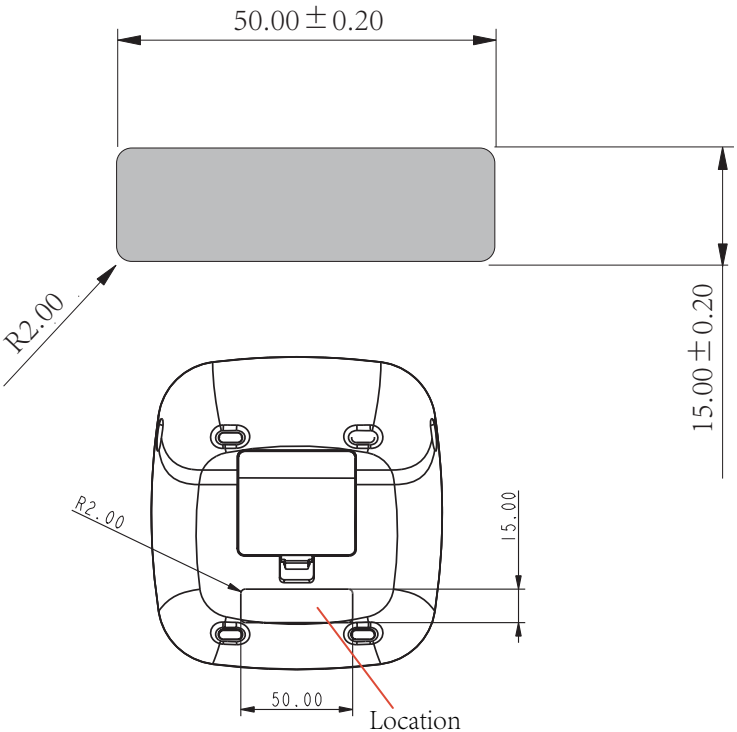
SN:2EB1267230300001--2EB1267230300050