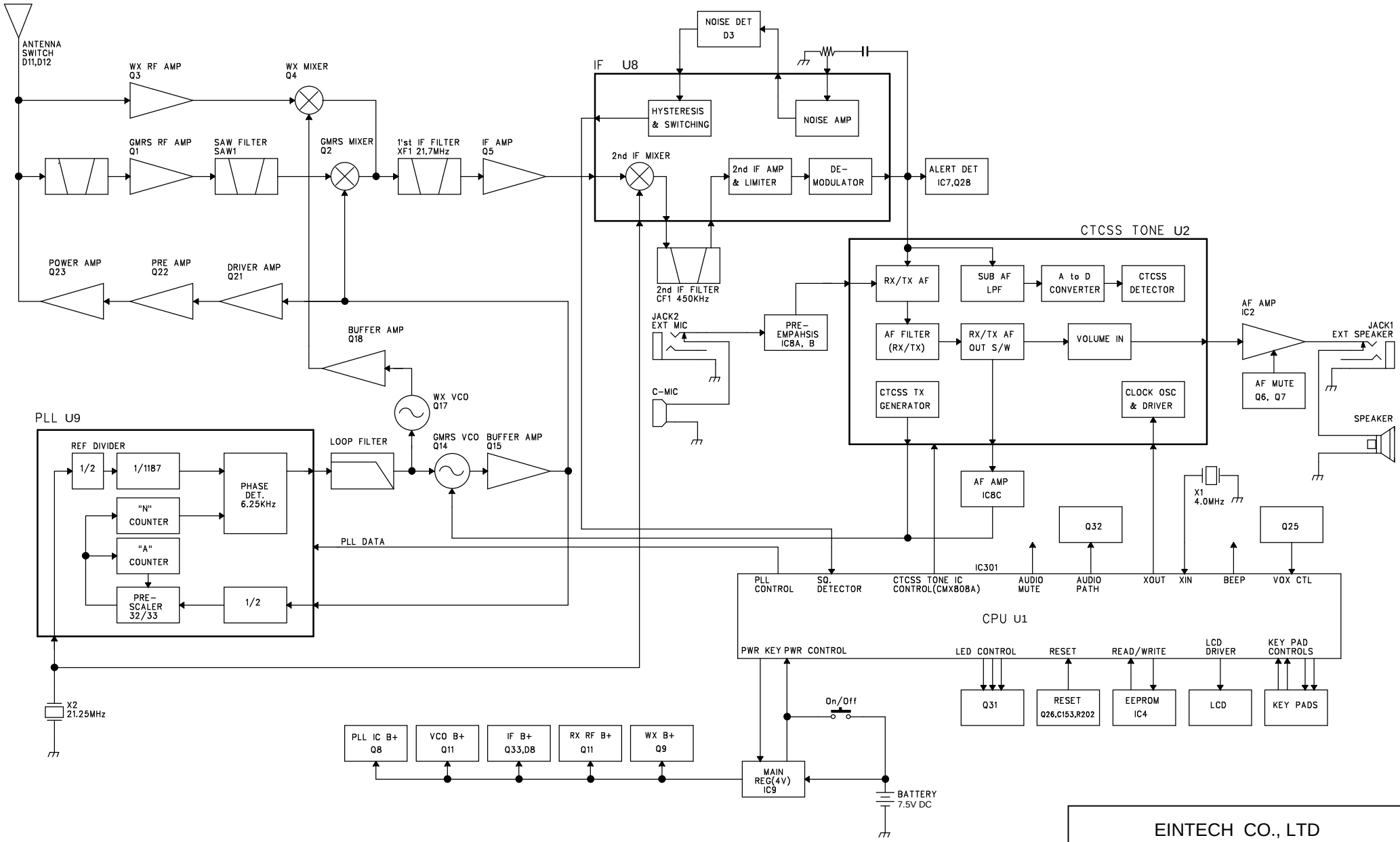

EINTECH CO., LTD

TITLE : GMRS-1545 (BLOCK DIAGRAM)

DRAWN	CHECKED	CHECKED	APPROVED	SHEET
				1 OF 1
				REV
				00