| | | | | |
|---|---|---|---|---|
| **Prüfbericht-Nr.:** *Test report no.:* | **CN23N9FS 005** | **Auftrags-Nr.:** *Order no.:* | 168423544 | Seite 1 von 33 *Page 1 of 33* |
| **Kunden-Referenz-Nr.:** *Client reference no.:* | N/A | **Auftragsdatum:** *Order date:* | 2023-04-19 | |
| **Auftraggeber:** *Client:* | **SZ DJI Osmo Technology Co., Ltd.** 4F, Jingkou Community Comprehensive Service Building, No. 83 Bishui Road North, Guangming Street, Guangming District, Shenzhen, China | | | |
| **Prüfgegenstand:** *Test item:* | Osmo Pocket 3 | | | |
| **Bezeichnung / Typ-Nr.:** *Identification / Type no.:* | PP-101 (Trademark: DJI) | | | |
| **Auftrags-Inhalt:** *Order content:* | FCC approval | | | |
| **Prüfgrundlage:** *Test specification:* | FCC 47 CFR § 2.1093<br>IEEE Std 1528-2013<br>IC RSS-102 Issue 5: March 2015<br>IEC/IEEE 62209-1528<br>Published RF exposure KDB procedures. | | | |
| **Wareneingangsdatum:** *Date of sample receipt:* | 2023-06-07 | Please refer to Photo Document | | |
| **Prüfmuster-Nr.:** *Test sample no:* | A003491201-009 | | | |
| **Prüfzeitraum:** *Testing period:* | 2023-08-01 –2023-08-02 | | | |
| **Ort der Prüfung:** *Place of testing:* | TÜV Rheinland (Shenzhen) Co., Ltd. | | | |
| **Prüflaboratorium:** *Testing laboratory:* | TÜV Rheinland (Shenzhen) Co., Ltd. | | | |
| **Prüfergebnis*:** *Test result*:* | Pass | | | |
| **geprüft von:** *tested by:* | x Bell Hu<br>Signed by: Bell Hu | **genehmigt von:** *authorized by:* | x Lin Lin<br>Signed by: Lin Lin | |
| **Datum:** *Date:* 2023-08-26 | | **Ausstellungsdatum:** *Issue date:* 2023-08-26 | | |
| **Stellung** / *Position:* | Project Manager | **Stellung** / *Position:* | Reviewer | |
| **Sonstiges** / *Other:* | FCC ID: 2ANDR-PP1012023<br>IC: 23060-PP1012023<br>HVIN: PP-101<br>PMN: Osmo Pocket 3 | | | |
| **Zustand des Prüfgegenstandes bei Anlieferung:** *Condition of the test item at delivery:* | Prüfmuster vollständig und unbeschädigt *Test item complete and undamaged* | | | |

| | | | | | |
|---|---|---|---|---|---|
| * Legende: | 1 = sehr gut | 2 = gut | 3 = befriedigend | 4 = ausreichend | 5 = mangelhaft |
| | P(ass) = entspricht o.g. Prüfgrundlage(n) | | F(ail) = entspricht nicht o.g. Prüfgrundlage(n) | N/A = nicht anwendbar | N/T = nicht getestet |
| ** Legend:* | *1 = very good* | *2 = good* | *3 = satisfactory* | *4 = sufficient* | *5 = poor* |
| | *P(ass) = passed a.m. test specification(s)* | | *F(ail) = failed a.m. test specification(s)* | *N/A = not applicable* | *N/T = not tested* |

**Dieser Prüfbericht bezieht sich nur auf das o.g. Prüfmuster und darf ohne Genehmigung der Prüfstelle nicht auszugsweise vervielfältigt werden. Dieser Bericht berechtigt nicht zur Verwendung eines Prüfzeichens.**
*This test report only relates to the a. m. test sample. Without permission of the test center this test report is not permitted to be duplicated in extracts. This test report does not entitle to carry any test mark.*
V05

## Anmerkungen
*Remarks*

| | |
|---|---|
| **1** | Alle eingesetzten Prüfmittel waren zum angegebenen Prüfzeitraum gemäß eines festgelegten Kalibrierungsprogramms unseres Prüfhauses kalibriert. Sie entsprechen den in den Prüfprogrammen hinterlegten Anforderungen. Die Rückverfolgbarkeit der eingesetzten Prüfmittel ist durch die Einhaltung der Regelungen unseres Managementsystems gegeben.<br>Detaillierte Informationen bezüglich Prüfkonditionen, Prüfequipment und Messunsicherheiten sind im Prüflabor vorhanden und können auf Wunsch bereitgestellt werden.<br><br>*The equipment used during the specified testing period was calibrated according to our test laboratory calibration program. The equipment fulfils the requirements included in the relevant standards. The traceability of the test equipment used is ensured by compliance with the regulations of our management system.*<br>*Detailed information regarding test conditions, equipment and measurement uncertainty is available in the test laboratory and could be provided on request.* |
| **2** | Wie vertraglich vereinbart, wurde dieses Dokument nur digital unterzeichnet. Der TÜV Rheinland hat nicht überprüft, welche rechtlichen oder sonstigen diesbezüglichen Anforderungen für dieses Dokument gelten. Diese Überprüfung liegt in der Verantwortung des Benutzers dieses Dokuments. Auf Verlangen des Kunden kann der TÜV Rheinland die Gültigkeit der digitalen Signatur durch ein gesondertes Dokument bestätigen. Diese Anfrage ist an unseren Vertrieb zu richten. Eine Umweltgebühr für einen solchen zusätzlichen Service wird erhoben.<br><br>*As contractually agreed, this document has been signed digitally only. TUV Rheinland has not verified and unable to verify which legal or other pertaining requirements are applicable for this document. Such verification is within the responsibility of the user of this document. Upon request by its client, TUV Rheinland can confirm the validity of the digital signature by a separate document. Such request shall be addressed to our Sales department. An environmental fee for such additional service will be charged.* |
| **3** | Prüfklausel mit der Note * wurden an qualifizierte Unterauftragnehmer vergeben und sind unter der jeweiligen Prüfklausel des Berichts beschrieben.<br>Abweichungen von Prüfspezifikation(en) oder Kundenanforderungen sind in der jeweiligen Prüfklausel im Bericht aufgeführt.<br><br>*Test clauses with remark of * are subcontracted to qualified subcontractors and descripted under the respective test clause in the report.*<br>*Deviations of testing specification(s) or customer requirements are listed in specific test clause in the report.* |
| **4** | Die Entscheidungsregel für Konformitätserklärungen basierend auf numerischen Messergebnisen in diesem Prüfbericht basiert auf der "Null-Grenzwert-Regel" und der "Einfachen Akzeptanz" gemäß ILAC G8:2019 und IEC Guide 115:2021, es sei denn, in der auf Seite 1 dieses Berichts genannten angewandten Norm ist etwas anderes festgelegt oder vom Kunden gewünscht. Dies bedeutet, dass die Messunsicherheit nicht berücksichtigt wird und daher auch nicht im Prüfbericht angegeben wird. Zu weiteren Informationen bezueglich des Risikos durch diese Entscheidungsregel siehe ILAC G8:2019.<br><br>The decision rule for statements of conformity, based on numerical measurement results, in this test report is based on the “Zero Guard Band Rule” and “Simple Acceptance” in accordance with ILAC G8:2019 and IEC Guide 115:2021, unless otherwise specified in the applied standard mentioned on Page 1 of this report or requested by the customer. This means that measurement uncertainty is not taken in account and hence also not declared in the test report. For additional information to the resulting risk based of this decision rule please refer to ILAC G8:2019. |

# Table of Contents

**1. GENERAL INFORMATION ..... 5**

**1.1. STATEMENT OF COMPLIANCE ..... 5**

**1.2. EQUIPMENT UNDER TEST (EUT) INFORMATION ..... 6**
*1.2.1. General Information ..... 6*
*1.2.2. Wireless Technologies ..... 6*

**2. TEST SITES ..... 7**

**2.1. TEST FACILITIES ..... 7**

**2.2. AMBIENT CONDITION ..... 7**

**2.3. LIST OF TEST AND MEASUREMENT INSTRUMENTS ..... 8**

**3. MEASUREMENT UNCERTAINTY ..... 9**

**4. TEST SPECIFICATION, METHODS AND PROCEDURES ..... 11**

**5. SAR MEASUREMENT SYSTEM ..... 12**

**5.1. DEFINITION OF SPECIFIC ABSORPTION RATE (SAR) ..... 12**

**5.2. SPEAG DASY SYSTEM ..... 12**
*5.2.1. Robot ..... 13*
*5.2.2. Probes ..... 14*
*5.2.3. Data Acquisition Electronics (DAE) ..... 14*
*5.2.4. Phantoms ..... 15*
*5.2.5. Device Holder ..... 16*
*5.2.6. System Validation Dipoles ..... 16*
*5.2.7. Tissue Simulating Liquids ..... 17*
*5.2.8. SAR System Verification ..... 20*

**6. SAR MEASUREMENT PROCEDURE ..... 21**

**6.1. AREA & ZOOM SCAN PROCEDURE ..... 21**

**6.2. VOLUME SCAN PROCEDURE ..... 21**

**6.3. POWER DRIFT MONITORING ..... 22**

**6.4. SPATIAL PEAK SAR EVALUATION ..... 22**

**6.5. SAR AVERAGED METHODS ..... 22**

**7. SAR MEASUREMENT EVALUATION ..... 23**

**7.1. EUT CONFIGURATION AND SETTING ..... 23**

**7.2. EUT TESTING POSITION ..... 25**
*7.2.1. Exposure Conditions ..... 25*

**7.3. TISSUE VERIFICATION ..... 26**

**7.4. SYSTEM VALIDATION ..... 26**

**7.5. SYSTEM VERIFICATION ..... 26**

**8. SAR MEASUREMENT EVALUATION ..... 27**

**8.1. MAXIMUM CONDUCTED POWER ..... 27**

**8.2. MEASURED CONDUCTED POWER RESULT ..... 28**

**8.3. SAR TESTING RESULTS ..... 30**
*8.3.1. SAR Test Reduction Considerations ..... 30*
*8.3.2. SAR Results for Body Exposure Condition (Separation Distance is 1 cm Gap) ..... 31*
*8.3.3. SAR Results for Extremity Exposure Condition (Separation Distance is 0 cm Gap) ..... 31*
*8.3.4. SAR Measurement Variability ..... 32*
*8.3.5. Appendixes ..... 33*

**Appendix A: SAR Plots of System Verification**

**Appendix B: SAR Plots of SAR Measurement**

**Appendix C: Calibration Certificate for probe and Dipole**

**Appendix D: Photographs of EUT and setup**

# 1. General Information

## 1.1. Statement of Compliance

The maximum results of Specific Absorption Rate (SAR) found during testing for the EUT are as follows:

| Mode | Highest Reported Body $SAR_{1g}$ (1.0 cm Gap) (W/kg) | Highest Reported Extremity $SAR_{10g}$ (0 cm Gap) (W/kg) |
|---|---|---|
| 2.4G WLAN | 0.29 | 0.82 |
| 5.2G WLAN | 0.54 | 2.01 |
| 5.8G WLAN | 0.93 | 1.79 |
| Bluetooth | 0.04 | 0.12 |

**Note:**

1. This device is in compliance with Specific Absorption Rate (SAR) for general population/uncontrolled exposure limits (1.6W/kg as averaged over any 1 gram of tissue; 10-gram SAR for Product Specific 10g SAR, limit: 4.0W/kg) specified in FCC 47 CFR part 2 (2.1093) and ANSI/IEEE C95.1-1992/ IC RSS-102 Issue 5:2015, and had been tested in accordance with the measurement methods and procedures specified in IEEE 1528-2013 and FCC KDB publications.
2. The 2.4G WLAN and 5G WLAN cannot transmit simultaneously.
3. The WLAN and Bluetooth cannot transmit simultaneously, so there is no co-location test requirement for WLAN and Bluetooth.

## 1.2. Equipment Under Test (EUT) Information

### 1.2.1. General Information

| | |
|---|---|
| **Equipment Name** | Osmo Pocket 3 |
| **FCC ID** | 2ANDR-PP1012023 |
| **IC** | 23060-PP1012023 |
| **Brand Name** | DJI |
| **Model Name** | PP-101 |
| **Antenna Type** | Fixed Internal Antenna |
| **EUT Stage** | Production Unit |

### 1.2.2. Wireless Technologies

| | |
|---|---|
| **Wireless Technology and Frequency Range** | WLAN 2.4GHz Band: 2412 MHz ~ 2462 MHz<br>WLAN 5.2GHz Band: 5180 MHz ~ 5240 MHz<br>WLAN 5.8GHz Band: 5745 MHz ~ 5825 MHz<br>Bluetooth: 2402 MHz ~ 2480 MHz |
| **Uplink Modulations** | 802.11b: DSSS<br>WLAN 2.4G 802.11g/n (HT20)/HT40: OFDM<br>WLAN 5G 802.11a/n (HT20)/HT40 /ac(VHT80): OFDM<br>Bluetooth® GFSK, π/4-DQPSK, 8-DPSK, LE 1M/2M |

**Note:**

1. The above EUT information is declared by manufacturer and for more detailed features description please refers to the manufacturer's specifications or User's Manual.

# 2. Test Sites

## 2.1. Test Facilities

**TÜV Rheinland (Shenzhen) Co., Ltd.**

No. 362 Huanguan Road Middle Longhua District, Shenzhen 518110 People's Republic of China

A2LA Cert. No.: 5162.01

FCC Registration No.: 694916

IC Registration No.: 25069

## 2.2. Ambient Condition

| | |
|---|---|
| Ambient Temperature | 21.5°C – 22.1°C |
| Relative Humidity | 46% - 50% |

## 2.3. List of Test and Measurement Instruments

| Equipment | Manufacturer | Model | SN | Cal. Date | Cal. Interval |
|---|---|---|---|---|---|
| System Validation Dipole | SPEAG | D2450V2 | 1014 | May. 19, 2021 | 3 years |
| System Validation Dipole | SPEAG | D5GHzV2 | 1280 | May. 17, 2021 | 3 years |
| Dosimetric E-Field Probe | SPEAG | EX3DV4 | 7506 | Jun. 29, 2023 | 1 year |
| Data Acquisition Electronics | SPEAG | DAE4 | 662 | Mar. 08, 2023 | 1 year |
| Signal Analyzer | R&S | FSV 7 | 103665 | Jul. 25, 2023 | 1 year |
| Vector Network Analyzer | R&S | ZNB 8 | 107040 | Jul. 25, 2023 | 1 year |
| Dielectric assessment Kit | SPEAG | DAK-3.5 | 1269 | Jun. 26, 2023 | 1 year |
| Signal Generator | R&S | SMB 100A | 180840 | Aug. 09, 2022 | 1 year |
| EPM Series Power Meter | Keysight | N1914A | MY58240005 | Nov. 21, 2022 | 1 year |
| Power Sensor | Keysight | N8481H | MY58250002 | Nov. 21, 2022 | 1 year |
| Power Sensor | Keysight | N8481H | MY58250006 | Nov. 21, 2022 | 1 year |
| DC Power Supply | Topward | 3303D | 809332 | Nov. 21, 2022 | 1 year |
| Coaxial Directional Couper | Keysight | 773D | MY52180552 | Nov. 21, 2022 | 1 year |
| Coaxial Directional Couper | shhuaxiang | DTO-0.4/3.9-10 | 18052101 | Nov. 21, 2022 | 1 year |
| Coaxial attenuator | Keysight | 8491A | MY52463219 | Nov. 21, 2022 | 1 year |
| Coaxial attenuator | Keysight | 8491A | MY52463210 | Nov. 21, 2022 | 1 year |
| Coaxial attenuator | Keysight | 8491A | MY52463222 | Nov. 21, 2022 | 1 year |
| Digital Thermometer | LKM | DTM3000 | 3116 | Nov. 21, 2022 | 1 year |
| Power Amplifier Mini circuit | mini-circuits | ZHL-42W | SN002101809 | N/A | N/A |
| Power Amplifier Mini circuit | mini-circuits | ZVE-8G | SN070501814 | N/A | N/A |
| PHANTOM | SPEAG | SAM-Twin V8.0 | 1961 | N/A | N/A |

# 3. Measurement Uncertainty

| Source of Uncertainty | Tolerance (± %) | Probability Distribution | Divisor | Ci (1g) | Ci (10g) | Standard Uncertainty (1g) | Standard Uncertainty (10g) | Vi Veff |
|---|---|---|---|---|---|---|---|---|
| **Measurement System Errors** | | | | | | | | |
| Probe Calibration | ±13.3% | Normal (k=2) | 2 | 1 | 1 | ± 6.65 % | ± 6.65 % | ∞ |
| Probe Calibration Drift | ±1.7% | Rectangular | √3 | 1 | 1 | ±1.0% | ±1.0% | ∞ |
| Probe Linearity | ±4.7% | Rectangular | √3 | 1 | 1 | ±2.7% | ±2.7% | ∞ |
| Broadband Signal | ±3.0% | Rectangular | √3 | 1 | 1 | ±1.7% | ±1.7% | ∞ |
| Probe Isotropy | ±7.6% | Rectangular | √3 | 1 | 1 | ±4.4% | ±4.4% | ∞ |
| Other Probe + Electronic | ±0.7% | Normal | 1 | 1 | 1 | ±0.7% | ±0.7% | ∞ |
| RF Ambient | ±1.8% | Normal | 1 | 1 | 1 | ±1.8% | ±1.8% | ∞ |
| Probe Positioning | ±0.006mm | Normal | 1 | 0.14 | 0.14 | ±0.10% | ±0.10% | ∞ |
| Data Processing | ±1.2% | Normal | 1 | 1 | 1 | ±1.2% | ±1.2% | ∞ |
| **Phantom and Device Errors** | | | | | | | | |
| Conductivity (meas.)[DAK] | ±2.5% | Normal | 1 | 0.78 | 0.71 | ±2.0% | ±1.8% | 100 |
| Conductivity (temp.)[BB] | ±3.3% | Rectangular | √3 | 0.78 | 0.71 | ±1.5% | ±1.4% | ∞ |
| Phantom Permittivity | ±14.0% | Rectangular | √3 | 0 | 0 | ±0% | ±0% | ∞ |
| Distance DUT – TSL | ±2.0% | Normal | 1 | 2 | 2 | ±4.0% | ±4.0% | ∞ |
| Device Positioning | ±2.4%/±2.8% | Normal | 1 | 1 | 1 | ±2.8% | ±2.8% | 30 |
| Device Holder | ±3.4%/±3.5% | Normal | 1 | 1 | 1 | ±3.5% | ±3.5% | 30 |
| DUT Modulation[m] | ±2.4% | Rectangular | √3 | 1 | 1 | ±1.4% | ±1.4% | ∞ |
| Time-average SAR | ±1.7% | Rectangular | √3 | 1 | 1 | ±1.0% | ±1.0% | ∞ |
| DUT drift | ±2.5% | Normal | 1 | 1 | 1 | ±2.5% | ±2.5% | 30 |
| Val Antenna Unc.[val] | ±0.0% | Normal | 1 | 1 | 1 | ±0% | ±0% | |
| Unc. Input Power[val] | ±0.0% | Normal | 1 | 1 | 1 | ±0% | ±0% | |
| **Correction to the SAR results** | | | | | | | | |
| C(ε,σ) | ±1.9% | Normal | 1 | 1 | 0.84 | ±1.9% | ±1.6% | |
| SAR scaling[p] | ±0.0% | Rectangular | √3 | 1 | 1 | ±0% | ±0% | |
| **Combined Standard Uncertainty (K = 1)** | | | | | | ±12.54% | ±12.44% | |
| **Expanded Uncertainty (K = 2)** | | | | | | **±25.1%** | **±24.9%** | |

**Uncertainty budget for frequency range 300 MHz to 3 GHz**

| Source of Uncertainty | Tolerance (± %) | Probability Distribution | Divisor | Ci (1g) | Ci (10g) | Standard Uncertainty (1g) | Standard Uncertainty (10g) | Vi Veff |
|---|---|---|---|---|---|---|---|---|
| **Measurement System Errors** | | | | | | | | |
| Probe Calibration | ±13.1% | Normal (k=2) | 2 | 1 | 1 | ± 7.0 % | ± 7.0 % | ∞ |
| Probe Calibration Drift | ±1.7% | Rectangular | √3 | 1 | 1 | ±1.0% | ±1.0% | ∞ |
| Probe Linearity | ±4.7% | Rectangular | √3 | 1 | 1 | ±2.7% | ±2.7% | ∞ |
| Broadband Signal | ±2.6% | Rectangular | √3 | 1 | 1 | ±1.5% | ±1.5% | ∞ |
| Probe Isotropy | ±7.6% | Rectangular | √3 | 1 | 1 | ±4.4% | ±4.4% | ∞ |
| Other Probe + Electronic | ±1.2% | Normal | 1 | 1 | 1 | ±1.2% | ±1.2% | ∞ |
| RF Ambient | ±1.8% | Normal | 1 | 1 | 1 | ±1.8% | ±1.8% | ∞ |
| Probe Positioning | ±0.005mm | Normal | 1 | 0.29 | 0.29 | ±0.15% | ±0.15% | ∞ |
| Data Processing | ±2.3% | Normal | 1 | 1 | 1 | ±2.3% | ±2.3% | ∞ |
| **Phantom and Device Errors** | | | | | | | | |
| Conductivity (meas.)[DAK] | ±2.5% | Normal | 1 | 0.78 | 0.71 | ±2.0% | ±1.8% | 60 |
| Conductivity (temp.)[BB] | ±3.3% | Rectangular | √3 | 0.78 | 0.71 | ±1.5% | ±1.4% | ∞ |
| Phantom Permittivity | ±14.0% | Rectangular | √3 | 0.25 | 0.25 | ±2% | ±2% | ∞ |
| Distance DUT – TSL | ±2.0% | Normal | 1 | 2 | 2 | ±4.0% | ±4.0% | ∞ |
| Device Positioning | ±2.4%/±2.8% | Normal | 1 | 1 | 1 | ±2.8% | ±2.8% | 30 |
| Device Holder | ±3.4%/±3.5% | Normal | 1 | 1 | 1 | ±3.5% | ±3.5% | 30 |
| DUT Modulation[m] | ±2.4% | Rectangular | √3 | 1 | 1 | ±1.4% | ±1.4% | ∞ |
| Time-average SAR | ±1.7% | Rectangular | √3 | 1 | 1 | ±1.0% | ±1.0% | ∞ |
| DUT drift | ±2.5% | Normal | 1 | 1 | 1 | ±2.5% | ±2.5% | 30 |
| Val Antenna Unc.[val] | ±0.0% | Normal | 1 | 1 | 1 | ±0% | ±0% | |
| Unc. Input Power[val] | ±0.0% | Normal | 1 | 1 | 1 | ±0% | ±0% | |
| **Correction to the SAR results** | | | | | | | | |
| Deviation to Target | ±1.9% | Normal | 1 | 1 | 0.84 | ±1.9% | ±1.6% | |
| SAR scaling[p] | ±0.0% | Rectangular | √3 | 1 | 1 | ±0% | ±0% | |
| **Combined Standard Uncertainty (K = 1)** | | | | | | ±12.8% | ±12.7% | |
| **Expanded Uncertainty (K = 2)** | | | | | | **±25.6%** | **±25.4%** | |

**Uncertainty budget for frequency range 3 GHz to 6 GHz**

# 4. Test Specification, Methods and Procedures

The tests documented in this report were performed in accordance with FCC 47 CFR § 2.1093, IEEE STD 1528- 2013, the following FCC Published RF exposure KDB procedures & manufacturer KDB inquiries:

- KDB 865664 D01 SAR Measurement 100 MHz to 6 GHz v01r04
- KDB 865664 D02 RF Exposure Reporting v01r02
- KDB 248227 D01 802 11 Wi-Fi SAR v02r02
- KDB 447498 D01 General RF Exposure Guidance v06
- KDB 447498 D04 Interim General RF Exposure Guidance v01
- IC RSS-102 Issue 5: March 2015
- IC RSS-102 Issue 5: Amendment 1 (February 2, 2021)
- IEC/IEEE 62209-1528:2020 Measurement procedure for the assessment of specific absorption rate of human exposure to radio frequency fields from hand-held and body-mounted wireless communication devices - Part 1528: Human models, instrumentation, and procedures (Frequency range of 4 MHz to 10 GHz)

In addition to the above, the following information was used:

- TCB workshop April, 2019; Page 19, Tissue Simulating Liquids(TSL)

# 5. SAR Measurement System

## 5.1. Definition of Specific Absorption Rate (SAR)

SAR is related to the rate at which energy is absorbed per unit mass in an object exposed to a radio field. The SAR distribution in a biological body is complicated and is usually carried out by experimental techniques or numerical modeling. The standard recommends limits for two tiers of groups, occupational/controlled and general population/uncontrolled, based on a person's awareness and ability to exercise control over his or her exposure. In general, occupational/controlled exposure limits are higher than the limits for general population/uncontrolled.

The SAR definition is the time derivative (rate) of the incremental energy (dW) absorbed by (dissipated in) an incremental mass (dm) contained in a volume element (dv) of a given density (ρ). The equation description is as below:

$$\mathbf{SAR} = \frac{\mathbf{d}}{\mathbf{dt}}\left(\frac{\mathbf{dW}}{\mathbf{dm}}\right) = \frac{\mathbf{d}}{\mathbf{dt}}\left(\frac{\mathbf{dW}}{\boldsymbol{\rho}\mathbf{dv}}\right)$$

SAR is expressed in units of Watts per kilogram (W/kg)
SAR measurement can be related to the electrical field in the tissue by

$$\mathbf{SAR} = \frac{\boldsymbol{\sigma}|\mathbf{E}|^2}{\boldsymbol{\rho}}$$

Where: σ is the conductivity of the tissue, ρ is the mass density of the tissue and E is the RMS electrical field strength.

## 5.2. SPEAG DASY System

DASY system consists of high precision robot, probe alignment sensor, phantom, robot controller, controlled measurement server and near-field probe. The robot includes six axes that can move to the precision position of the DASY5 software defined. The DASY software can define the area that is detected by the probe. The robot is connected to controlled box. Controlled measurement server is connected to the controlled robot box. The DAE includes amplifier, signal multiplexing, AD converter, offset measurement and surface detection. It is connected to the Electro-optical coupler (ECO). The ECO performs the conversion form the optical into digital electric signal of the DAE and transfers data to the PC.

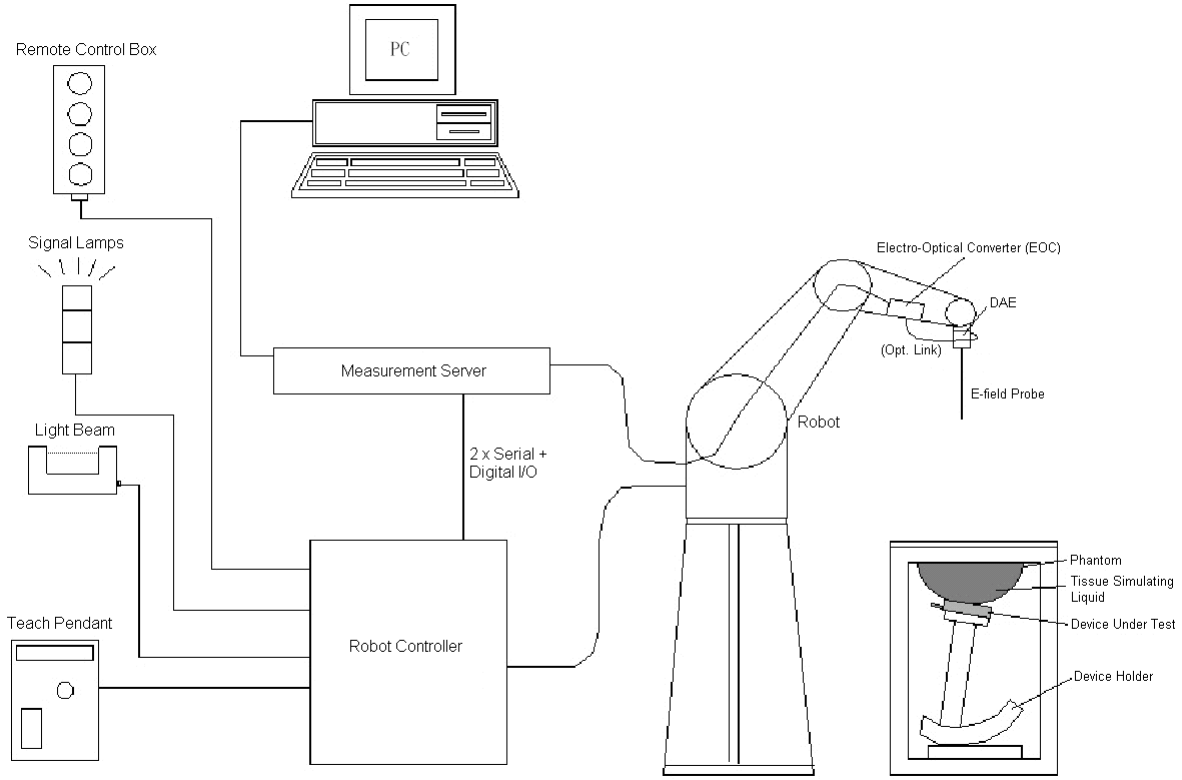


**DASY System Setup**

### 5.2.1.Robot

The DASY system uses the high precision robots from Stäubli SA (France). For the 6-axis controller system, the robot controller version (DASY5: CS8c) from Stäubli is used. The Stäubli robot series have many features that are important for our application:

- High precision (repeatability ±0.035 mm)
- High reliability (industrial design)
- Jerk-free straight movements
- Low ELF interference (the closed metallic construction shields against motor control fields)

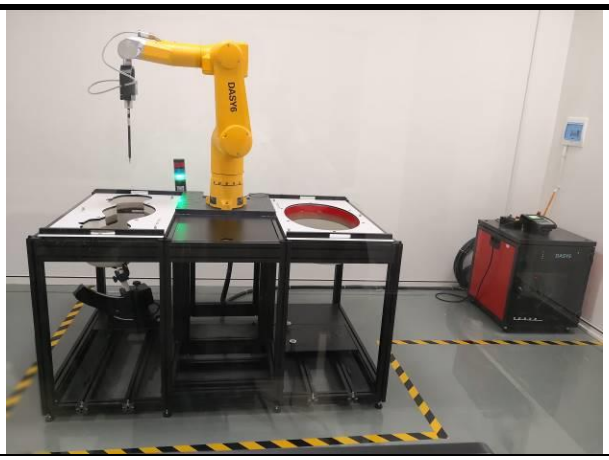


**DASY6**

### 5.2.2. Probes

The SAR measurement is conducted with the dosimetric probe. The probe is specially designed and calibrated for use in liquid with high permittivity. The dosimetric probe has special calibration in liquid at different frequency.

| | | |
|---|---|---|
| **Model** | EX3DV4 | |
| **Construction** | Symmetrical design with triangular core. Built-in shielding against static charges. PEEK enclosure material (resistant to organic solvents, e.g., DGBE). | |
| **Frequency** | 4 MHz – 10 GHz<br>Linearity: ±0.2 dB (30 MHz – 10 GHz) | |
| **Directivity** | ±0.1 dB in TSL (rotation around probe axis)<br>±0.3 dB in TSL (rotation normal to probe axis) | |
| **Dynamic Range** | 10 µW/g – >100 mW/g<br>Linearity: ±0.2 dB (noise: typically <1 µW/g) | |
| **Dimensions** | Overall length: 337 mm (tip: 20 mm)<br>Tip diameter: 2.5 mm (body: 12 mm)<br>Typical distance from probe tip to dipole centers: 1 mm | |

### 5.2.3.Data Acquisition Electronics (DAE)

| | | |
|---|---|---|
| **Model** | DAE4 | |
| **Construction** | Signal amplifier, multiplexer, A/D converter and control logic. Serial optical link for communication with DASY embedded system (fully remote controlled). Two step probe touch detector for mechanical surface detection and emergency robot stop. | |
| **Measurement Range** | -100 to +300 mV (16 bit resolution and two range settings: 4mV, 400mV) | |
| **Input Offset Voltage** | < 5µV (with auto zero) | |
| **Input Bias Current** | < 50 fA | |
| **Dimensions** | 60 x 60 x 68 mm | |

### 5.2.4. Phantoms

| | | |
|---|---|---|
| **Model** | Twin SAM | |
| **Construction** | The shell corresponds to the specifications of the Specific Anthropomorphic Mannequin (SAM) phantom defined in IEC/IEEE 62209-1528. It enables the dosimetric evaluation of left and right hand phone usage as well as body-mounted usage at the flat phantom region. A cover prevents evaporation of the liquid. Reference markings on the phantom allow the complete setup of all predefined phantom positions and measurement grids by teaching three points with the robot. | |
| **Material** | Vinylester, glass fiber reinforced (VE-GF) | |
| **Shell Thickness** | 2 ± 0.2 mm (6 ± 0.2 mm at ear point) | |
| **Dimensions** | Length: 1000 mm<br>Width: 500 mm<br>Height: adjustable feet | |
| **Filling Volume** | approx. 25 liters | |

| | | |
|---|---|---|
| **Model** | ELI | |
| **Construction** | The ELI phantom is used for compliance testing of handheld and body-mounted wireless devices in the frequency range of 4 MHz to 10 GHz. ELI is fully compatible with the IEC/IEEE 62209-1528 standard and all known tissue simulating liquids. ELI has been optimized regarding its performance and can be integrated into our standard phantom tables. A cover prevents evaporation of the liquid. Reference markings on the phantom allow installation of the complete setup, including all predefined phantom positions and measurement grids, by teaching three points. The phantom is compatible with all of SPEAG's dosimetric probes and dipoles. | |
| **Material** | Vinylester, glass fiber reinforced (VE-GF) | |
| **Shell Thickness** | 2.0 ± 0.2 mm (bottom plate) | |
| **Dimensions** | Major axis: 600 mm<br>Minor axis: 400 mm | |
| **Filling Volume** | approx. 30 liters | |

### 5.2.5. Device Holder

| | | |
|---|---|---|
| **Model** | Mounting Device | |
| **Construction** | In combination with the Twin SAM Phantom or ELI4, the Mounting Device enables the rotation of the mounted transmitter device in spherical coordinates. Rotation point is the ear opening point. Transmitter devices can be easily and accurately positioned according to IEC, IEEE, FCC or other specifications. The device holder can be locked for positioning at different phantom sections (left head, right head, flat). | |
| **Material** | POM | |

| | | |
|---|---|---|
| **Model** | Laptop Extensions Kit | |
| **Construction** | Simple but effective and easy-to-use extension for Mounting Device that facilitates the testing of larger devices according to IEC 62209-1528 (e.g., laptops, cameras, etc.). It is lightweight and fits easily on the upper part of the Mounting Device in place of the phone positioner. | |
| **Material** | POM, Acrylic glass, Foam | |

### 5.2.6.System Validation Dipoles

| | | |
|---|---|---|
| **Model** | D-Serial | |
| **Construction** | Symmetrical dipole with l/4 balun. Enables measurement of feed point impedance with NWA. Matched for use near flat phantoms filled with tissue simulating solutions. | |
| **Frequency** | 750 MHz to 5800 MHz | |
| **Return Loss** | > 20 dB | |
| **Power Capability** | > 100 W (f < 1GHz), > 40 W (f > 1GHz) | |

### 5.2.7. Tissue Simulating Liquids

For SAR measurement of the field distribution inside the phantom, the phantom must be filled with homogeneous tissue simulating liquid to a depth of at least 15 cm. For head SAR testing, the liquid height from the ear reference point (ERP) of the phantom to the liquid top surface is larger than 15 cm. For body SAR testing, the liquid height from the center of the flat phantom to the liquid top surface is larger than 15 cm. The nominal dielectric values of the tissue simulating liquids in the phantom and the tolerance of 5% are listed.

| | |
|---|---|
| 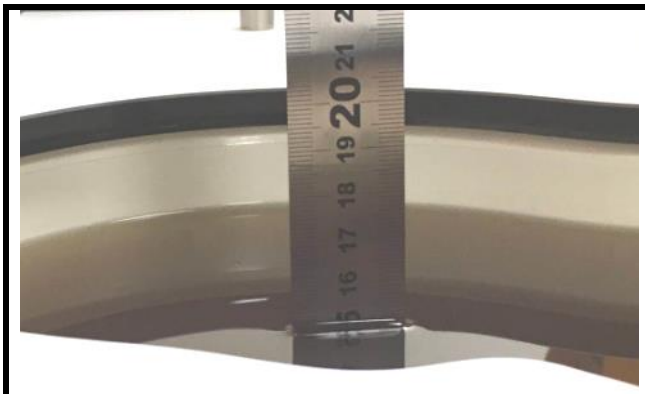 | 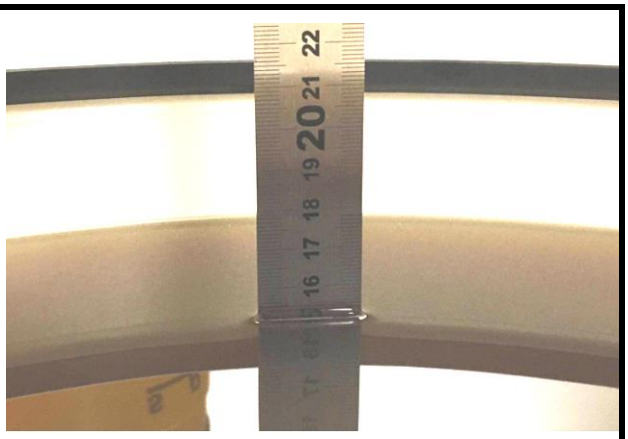 |
| **Photo of Liquid Height for Head Position** | **Photo of Liquid Height for Body Position** |

The dielectric properties of the head tissue simulating liquids are defined in IEEE 1528, and KDB 865664 D01 Appendix A. For the body tissue simulating liquids, the dielectric properties are defined in KDB 865664 D01 Appendix A. The dielectric properties of the tissue simulating liquids were verified prior to the SAR evaluation using a dielectric assessment kit and a network analyzer.

**Targets of Tissue Simulating Liquid**

| Frequency (MHz) | Target Permittivity | Range of ±5% | Target Conductivity | Range of ±5% |
|---|---|---|---|---|
| **For Head** | | | | |
| 750 | 41.9 | 39.8 ~ 44.0 | 0.89 | 0.85 ~ 0.93 |
| 835 | 41.5 | 39.4 ~ 43.6 | 0.90 | 0.86 ~ 0.95 |
| 900 | 41.5 | 39.4 ~ 43.6 | 0.97 | 0.92 ~ 1.02 |
| 1450 | 40.5 | 38.5 ~ 42.5 | 1.20 | 1.14 ~ 1.26 |
| 1640 | 40.3 | 38.3 ~ 42.3 | 1.29 | 1.23 ~ 1.35 |
| 1750 | 40.1 | 38.1 ~ 42.1 | 1.37 | 1.30 ~ 1.44 |
| 1800 | 40.0 | 38.0 ~ 42.0 | 1.40 | 1.33 ~ 1.47 |
| 1900 | 40.0 | 38.0 ~ 42.0 | 1.40 | 1.33 ~ 1.47 |
| 2000 | 40.0 | 38.0 ~ 42.0 | 1.40 | 1.33 ~ 1.47 |
| 2300 | 39.5 | 37.5 ~ 41.5 | 1.67 | 1.59 ~ 1.75 |
| 2450 | 39.2 | 37.2 ~ 41.2 | 1.80 | 1.71 ~ 1.89 |
| 2600 | 39.0 | 37.1 ~ 41.0 | 1.96 | 1.86 ~ 2.06 |
| 3500 | 37.9 | 36.0 ~ 39.8 | 2.91 | 2.76 ~ 3.06 |
| 5200 | 36.0 | 34.2 ~ 37.8 | 4.66 | 4.43 ~ 4.89 |
| 5300 | 35.9 | 34.1 ~ 37.7 | 4.76 | 4.52 ~ 5.00 |
| 5500 | 35.6 | 33.8 ~ 37.4 | 4.96 | 4.71 ~ 5.21 |
| 5600 | 35.5 | 33.7 ~ 37.3 | 5.07 | 4.82 ~ 5.32 |
| 5800 | 35.3 | 33.5 ~ 37.1 | 5.27 | 5.01 ~ 5.53 |
| **For Body** | | | | |
| 750 | 55.5 | 52.7 ~ 58.3 | 0.96 | 0.91 ~ 1.01 |
| 835 | 55.2 | 52.4 ~ 58.0 | 0.97 | 0.92 ~ 1.02 |
| 900 | 55.0 | 52.3 ~ 57.8 | 1.05 | 1.00 ~ 1.10 |
| 1450 | 54.0 | 51.3 ~ 56.7 | 1.30 | 1.24 ~ 1.37 |
| 1640 | 53.8 | 51.1 ~ 56.5 | 1.40 | 1.33 ~ 1.47 |
| 1750 | 53.4 | 50.7 ~ 56.1 | 1.49 | 1.42 ~ 1.56 |
| 1800 | 53.3 | 50.6 ~ 56.0 | 1.52 | 1.44 ~ 1.60 |
| 1900 | 53.3 | 50.6 ~ 56.0 | 1.52 | 1.44 ~ 1.60 |
| 2000 | 53.3 | 50.6 ~ 56.0 | 1.52 | 1.44 ~ 1.60 |
| 2300 | 52.9 | 50.3 ~ 55.5 | 1.81 | 1.72 ~ 1.90 |
| 2450 | 52.7 | 50.1 ~ 55.3 | 1.95 | 1.85 ~ 2.05 |
| 2600 | 52.5 | 49.9 ~ 55.1 | 2.16 | 2.05 ~ 2.27 |
| 3500 | 51.3 | 48.7 ~ 53.9 | 3.31 | 3.14 ~ 3.48 |
| 5200 | 49.0 | 46.6 ~ 51.5 | 5.30 | 5.04 ~ 5.57 |
| 5300 | 48.9 | 46.5 ~ 51.3 | 5.42 | 5.15 ~ 5.69 |
| 5500 | 48.6 | 46.2 ~ 51.0 | 5.65 | 5.37 ~ 5.93 |
| 5600 | 48.5 | 46.1 ~ 50.9 | 5.77 | 5.48 ~ 6.06 |
| 5800 | 48.2 | 45.8 ~ 50.6 | 6.00 | 5.70 ~ 6.30 |

The following table gives the recipes for tissue simulating liquids.

**Recipes of Tissue Simulating Liquid**

| Tissue Type | Bactericide | DGBE | HEC | NaCl | Sucrose | Triton X-100 | Water | Diethylene Glycol Mono-hexylether |
|---|---|---|---|---|---|---|---|---|
| H750 | 0.2 | - | 0.2 | 1.5 | 56.0 | - | 42.1 | - |
| H835 | 0.2 | - | 0.2 | 1.5 | 57.0 | - | 41.1 | - |
| H900 | 0.2 | - | 0.2 | 1.4 | 58.0 | - | 40.2 | - |
| H1450 | - | 43.3 | - | 0.6 | - | - | 56.1 | - |
| H1640 | - | 45.8 | - | 0.5 | - | - | 53.7 | - |
| H1750 | - | 47.0 | - | 0.4 | - | - | 52.6 | - |
| H1800 | - | 44.5 | - | 0.3 | - | - | 55.2 | - |
| H1900 | - | 44.5 | - | 0.2 | - | - | 55.3 | - |
| H2000 | - | 44.5 | - | 0.1 | - | - | 55.4 | - |
| H2300 | - | 44.9 | - | 0.1 | - | - | 55.0 | - |
| H2450 | - | 45.0 | - | 0.1 | - | - | 54.9 | - |
| H2600 | - | 45.1 | - | 0.1 | - | - | 54.8 | - |
| H3500 | - | 8.0 | - | 0.2 | - | 20.0 | 71.8 | - |
| H5G | - | - | - | - | - | 17.2 | 65.5 | 17.3 |
| B750 | 0.2 | - | 0.2 | 0.8 | 48.8 | - | 50.0 | - |
| B835 | 0.2 | - | 0.2 | 0.9 | 48.5 | - | 50.2 | - |
| B900 | 0.2 | - | 0.2 | 0.9 | 48.2 | - | 50.5 | - |
| B1450 | - | 34.0 | - | 0.3 | - | - | 65.7 | - |
| B1640 | - | 32.5 | - | 0.3 | - | - | 67.2 | - |
| B1750 | - | 31.0 | - | 0.2 | - | - | 68.8 | - |
| B1800 | - | 29.5 | - | 0.4 | - | - | 70.1 | - |
| B1900 | - | 29.5 | - | 0.3 | - | - | 70.2 | - |
| B2000 | - | 30.0 | - | 0.2 | - | - | 69.8 | - |
| B2300 | - | 31.0 | - | 0.1 | - | - | 68.9 | - |
| B2450 | - | 31.4 | - | 0.1 | - | - | 68.5 | - |
| B2600 | - | 31.8 | - | 0.1 | - | - | 68.1 | - |
| B3500 | - | 28.8 | - | 0.1 | - | - | 71.1 | - |
| B5G | - | - | - | - | - | 10.7 | 78.6 | 10.7 |

**Simulating Head Liquid (HBBL600-6000MHz), Manufactured by SPEAG:**

| Water (% by weight) | Esters, Emulsifiers, Inhibitors (% by weight) | Sodium salt (% by weight) |
|---|---|---|
| 50 - 65% | 10 - 30% | 8 - 25% |

**Simulating Body Liquid (MBBL600-6000MHz), Manufactured by SPEAG:**

| Water (% by weight) | Esters, Emulsifiers, Inhibitors (% by weight) | Sodium salt (% by weight) |
|---|---|---|
| 60 - 80% | 20 - 40% | 0 – 1.5% |

### 5.2.8.SAR System Verification

The system check verifies that the system operates within its specifications. It is performed daily or before every SAR measurement. The system check uses normal SAR measurements in the flat section of the phantom with a matched dipole at a specified distance. The system verification setup is shown as below.

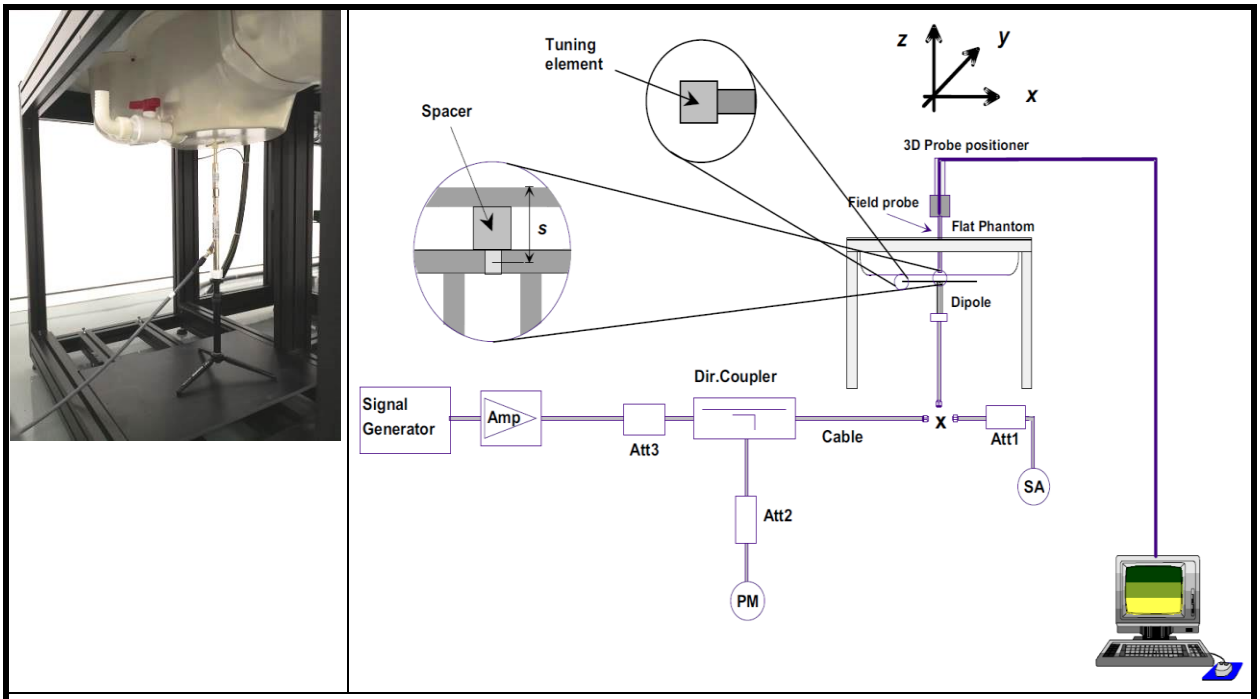


**System Verification Setup**

The validation dipole is placed beneath the flat phantom with the specific spacer in place. The distance spacer is touch the phantom surface with a light pressure at the reference marking and be oriented parallel to the long side of the phantom. The spectrum analyzer measures the forward power at the location of the system check dipole connector. The signal generator is adjusted for the desired forward power (250 mW is used for 700 MHz to 3 GHz, 100 mW is used for 3.5 GHz to 6 GHz) at the dipole connector and the power meter is read at that level. After connecting the cable to the dipole, the signal generator is readjusted for the same reading at power meter.

After system check testing, the SAR result will be normalized to 1W forward input power and compared with the reference SAR value derived from validation dipole certificate report. The deviation of system check should be within 10 %.

# 6. SAR Measurement Procedure

According to the SAR test standard, the recommended procedure for assessing the peak spatial-average SAR value consists of the following steps:

(a) Power reference measurement
(b) Area scan
(c) Zoom scan
(d) Power drift measurement

The SAR measurement procedures for each of test conditions are as follows:

(a) Make EUT to transmit maximum output power
(b) Measure conducted output power through RF cable
(c) Place the EUT in the specific position of phantom
(d) Perform SAR testing steps on the DASY system
(e) Record the SAR value

## 6.1. Area & Zoom Scan Procedure

First Area Scan is used to locate the approximate location(s) of the local peak SAR value(s). The measurement grid within an Area Scan is defined by the grid extent, grid step size and grid offset. Next, in order to determine the EM field distribution in a three-dimensional spatial extension, Zoom Scan is required. The Zoom Scan is performed around the highest E-field value to determine the averaged SAR-distribution over 10 g. According to KDB 865664 D01, the resolution for Area and Zoom scan is specified in the table below.

| Items | <= 2 GHz | 2-3 GHz | 3-4 GHz | 4-5 GHz | 5-6 GHz |
|---|---|---|---|---|---|
| Area Scan (Δx, Δy) | <= 15 mm | <= 12 mm | <= 12 mm | <= 10 mm | <= 10 mm |
| Zoom Scan (Δx, Δy) | <= 8 mm | <= 5 mm | <= 5 mm | <= 4 mm | <= 4 mm |
| Zoom Scan (Δz) | <= 5 mm | <= 5 mm | <= 4 mm | <= 3 mm | <= 2 mm |
| Zoom Scan Volume | >= 30 mm | >= 30 mm | >= 28 mm | >= 25 mm | >= 22 mm |

**Note:**
When zoom scan is required and report SAR is <= 1.4 W/kg, the zoom scan resolution of Δx / Δy (2-3GHz: <= 8 mm, 3-4GHz: <= 7 mm, 4-6GHz: <= 5 mm) may be applied.

## 6.2. Volume Scan Procedure

The volume scan is used for assess overlapping SAR distributions for antennas transmitting in different frequency bands. It is equivalent to an oversized zoom scan used in standalone measurements. The measurement volume will be used to enclose all the simultaneous transmitting antennas. For antennas transmitting simultaneously in different frequency bands, the volume scan is measured separately in each frequency band. In order to sum correctly to compute the 1g aggregate SAR, the EUT remain in the same test position for all measurements and all volume scan use the same spatial resolution and grid spacing. When all volume scan were completed, the software, SEMCAD postprocessor can combine and subsequently superpose these measurement data to calculating the multiband SAR.

## 6.3. Power Drift Monitoring

All SAR testing is under the EUT install full charged battery and transmit maximum output power. In DASY measurement software, the power reference measurement and power drift measurement procedures are used for monitoring the power drift of EUT during SAR test. Both these procedures measure the field at a specified reference position before and after the SAR testing. The software will calculate the field difference in dB. If the power drift more than 5%, the SAR will be retested.

## 6.4. Spatial Peak SAR Evaluation

The procedure for spatial peak SAR evaluation has been implemented according to the test standard. It can be conducted for 1g and 10g, as well as for user-specific masses. The DASY software includes all numerical procedures necessary to evaluate the spatial peak SAR value.

The base for the evaluation is a "cube" measurement. The measured volume must include the 1g and 10g cubes with the highest averaged SAR values. For that purpose, the center of the measured volume is aligned to the interpolated peak SAR value of a previously performed area scan.

The entire evaluation of the spatial peak values is performed within the post-processing engine (SEMCAD). The system always gives the maximum values for the 1g and 10g cubes. The algorithm to find the cube with highest averaged SAR is divided into the following stages:

(a) Extraction of the measured data (grid and values) from the Zoom Scan
(b) Calculation of the SAR value at every measurement point based on all stored data (A/D values and measurement parameters)
(c) Generation of a high-resolution mesh within the measured volume
(d) Interpolation of all measured values form the measurement grid to the high-resolution grid
(e) Extrapolation of the entire 3-D field distribution to the phantom surface over the distance from sensor to surface
(f) Calculation of the averaged SAR within masses of 1g and 10g

## 6.5. SAR Averaged Methods

In DASY, the interpolation and extrapolation are both based on the modified Quadratic Shepard’s method. The interpolation scheme combines a least-square fitted function method and a weighted average method which are the two basic types of computational interpolation and approximation.

Extrapolation routines are used to obtain SAR values between the lowest measurement points and the inner phantom surface. The extrapolation distance is determined by the surface detection distance and the probe sensor offset. The uncertainty increases with the extrapolation distance. To keep the uncertainty within 1% for the 1 g and 10 g cubes, the extrapolation distance should not be larger than 5 mm.

# 7. SAR Measurement Evaluation

## 7.1. EUT Configuration and Setting

**<Considerations Related to WLAN for Setup and Testing>**

In general, various vendor specific external test software and chipset based internal test modes are typically used for SAR measurement. These chipset based test mode utilities are generally hardware and manufacturer dependent, and often include substantial flexibility to reconfigure or reprogram a device. A Wi-Fi device must be configured to transmit continuously at the required data rate, channel bandwidth and signal modulation, using the highest transmission duty factor supported by the test mode tools for SAR measurement. The test frequencies established using test mode must correspond to the actual channel frequencies. When 802.11 frame gaps are accounted for in the transmission, a maximum transmission duty factor of 92 - 96% is typically achievable in most test mode configurations. A minimum transmission duty factor of 85% is required to avoid certain hardware and device implementation issues related to wide range SAR scaling. In addition, a periodic transmission duty factor is required for current generation SAR systems to measure SAR correctly. The reported SAR must be scaled to 100% transmission duty factor to determine compliance at the maximum tune-up tolerance limit.

According to KDB 248227 D01, this device has installed WLAN engineering testing software which can provide continuous transmitting RF signal. During WLAN SAR testing, this device was operated to transmit continuously at the maximum transmission duty with specified transmission mode, operating frequency, lowest data rate, and maximum output power.

**Initial Test Configuration**

An initial test configuration is determined for OFDM transmission modes in 2.4 GHz and 5 GHz bands according to the channel bandwidth, modulation and data rate combination(s) with the highest maximum output power specified for production units in each standalone and aggregated frequency band. When the same maximum power is specified for multiple transmission modes in a frequency band, the largest channel bandwidth, lowest order modulation, lowest data rate and lowest order 802.11a/g/n/ac mode is used for SAR measurement, on the highest measured output power channel in the initial test configuration, for each frequency band.

**Subsequent Test Configuration**

SAR measurement requirements for the remaining 802.11 transmission mode configurations that have not been tested in the initial test configuration are determined separately for each standalone and aggregated frequency band, in each exposure condition, according to the maximum output power specified for production units. Additional power measurements may be required to determine if SAR measurements are required for subsequent highest output power channels in a subsequent test configuration. When the highest reported SAR for the initial test configuration according to the initial test position or fixed exposure position requirements, is adjusted by the ratio of the subsequent test configuration to initial test configuration specified maximum output power and the adjusted SAR is ≤ 1.2 W/kg, SAR is not required for that subsequent test configuration.

**SAR Test Configuration and Channel Selection**

When multiple channel bandwidth configurations in a frequency band have the same specified maximum output power, the initial test configuration is using largest channel bandwidth, lowest order modulation, lowest data rate, and lowest order 802.11 mode (i.e., 802.11a is chosen over 802.11n then 802.11ac or 802.11g is

chosen over 802.11n). After an initial test configuration is determined, if multiple test channels have the same measured maximum output power, the channel chosen for SAR measurement is determined according to the following.

1) The channel closest to mid-band frequency is selected for SAR measurement.

2) For channels with equal separation from mid-band frequency; for example, high and low channels or two mid-band channels, the higher frequency (number) channel is selected for SAR measurement.

**<Considerations Related to Bluetooth for Setup and Testing>**

This device has installed Bluetooth engineering testing software which can provide continuous transmitting RF signal. During Bluetooth SAR testing, this device was operated to transmit continuously at the maximum transmission duty with specified transmission mode, operating frequency, lowest data rate, and maximum output power.

## 7.2. EUT Testing Position

### 7.2.1. Exposure Conditions

For this device, SAR evaluation is required on all sides and edges with a transmitting antenna within 25 mm from that surface or edge, at 10 mm separation from a flat phantom, Next to the Body exposure requires 1-g SAR, and at 0 mm separation from a flat phantom, Next to the Hand exposure requires 10-g SAR. for the data modes, wireless technologies and frequency bands supported by the device to determine SAR compliance.

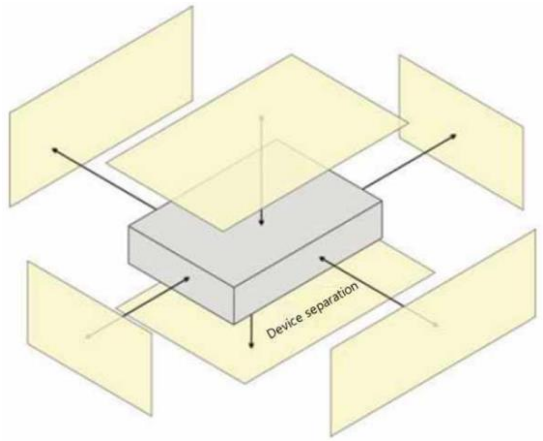

## 7.3. Tissue Verification

The measuring results for tissue simulating liquid are shown as below.

| Test Date | Tissue Type | Frequency (MHz) | Measured Conductivity (σ) | Measured Permittivity ($\varepsilon_r$) | Target Conductivity (σ) | Target Permittivity ($\varepsilon_r$) | Conductivity Deviation (%) | Permittivity Deviation (%) |
|---|---|---|---|---|---|---|---|---|
| Aug. 01, 2023 | H2450 | 2450 | 1.872 | 38.153 | 1.80 | 39.20 | 4.00 | -2.67 |
| | | 2437 | 1.861 | 38.180 | 1.79 | 39.22 | 4.08 | -2.65 |
| | | 2441 | 1.864 | 38.168 | 1.79 | 39.21 | 4.02 | -2.66 |
| Aug. 02, 2023 | H5G | 5250 | 4.735 | 36.296 | 4.71 | 35.90 | 0.53 | 1.10 |
| | | 5180 | 4.663 | 36.396 | 4.64 | 36.02 | 0.52 | 1.04 |
| | | 5200 | 4.685 | 36.381 | 4.66 | 36.00 | 0.54 | 1.06 |
| | | 5240 | 4.724 | 36.308 | 4.70 | 35.96 | 0.51 | 0.97 |
| Aug. 02, 2023 | H5G | 5800 | 5.305 | 35.501 | 5.27 | 35.30 | 0.66 | 0.57 |
| | | 5745 | 5.252 | 35.573 | 5.22 | 35.35 | 0.71 | 0.63 |
| | | 5785 | 5.286 | 35.524 | 5.26 | 35.31 | 0.59 | 0.61 |
| | | 5825 | 5.329 | 35.468 | 5.30 | 35.27 | 0.62 | 0.56 |

**Note:**

The dielectric properties of the tissue simulating liquid must be measured within 24 hours before the SAR testing and within ±5% of the target values. Liquid temperature during the SAR testing must be within ±2 ℃.

## 7.4. System Validation

The SAR measurement system was validated according to procedures in KDB 865664 D01. The validation status in tabulated summary is as below.

| Test Date | Probe S/N | Calibration Point | | Measured Conductivity (σ) | Measured Permittivity ($\varepsilon_r$) | Validation for CW | | | Validation for Modulation | | |
|---|---|---|---|---|---|---|---|---|---|---|---|
| | | | | | | Sensitivity Range | Probe Linearity | Probe Isotropy | Modulation Type | Duty Factor | PAR |
| Aug. 01, 2023 | 7506 | Head | 2450 | 1.872 | 38.153 | Pass | Pass | Pass | OFDM | N/A | Pass |
| Aug. 02, 2023 | 7506 | Head | 5200 | 4.735 | 36.296 | Pass | Pass | Pass | OFDM | N/A | Pass |
| Aug. 02, 2023 | 7506 | Head | 5800 | 5.305 | 35.501 | Pass | Pass | Pass | OFDM | N/A | Pass |

## 7.5. System Verification

The measuring result for system verification is tabulated as below.

| Test Date | Frequency (MHz) | 1W Target SAR-1g (W/kg) | Measured SAR-1g (W/kg) | Normalized to 1W SAR-1g (W/kg) | Deviation (%) | Dipole S/N | Probe S/N | DAE S/N |
|---|---|---|---|---|---|---|---|---|
| Aug. 01, 2023 | 2450 | 51.80 | 13.50 | 54.00 | 4.25 | 1014 | 7506 | 662 |
| Aug. 02, 2023 | 5250 | 79.20 | 8.15 | 81.50 | 2.90 | 1280 | 7506 | 662 |
| Aug. 02, 2023 | 5800 | 80.60 | 8.48 | 84.80 | 5.21 | 1280 | 7506 | 662 |

**Note:**

Comparing to the reference SAR value provided by SPEAG, the validation data should be within its specification of 10 %. The result indicates the system check can meet the variation criterion and the plots can be referred to Appendix A of this report.

# 8. SAR Measurement Evaluation

## 8.1. Maximum Conducted Power

The maximum conducted average power (Unit: dBm) including tune-up tolerance is shown as below.

| Mode | 2.4G WLAN | 5.2G WLAN | 5.8G WLAN |
|---|---|---|---|
| 802.11b | 18.5 | N/A | N/A |
| 802.11g | 19.0 | N/A | N/A |
| 802.11a | N/A | 17.5 | 16.0 |
| 802.11n HT20 | 19.0 | 17.0 | 16.0 |
| 802.11n HT40 | 15.0 | 14.0 | 13.5 |
| 802.11ac VHT80 | N/A | 12.5 | 12.5 |

| Mode | 2.4G Bluetooth |
|---|---|
| GFSK | 9.5 |
| 8DPSK | 9.5 |
| LE 1M | 7.0 |
| LE 2M | 6.5 |

## 8.2. Measured Conducted Power Result

All Rate have been tested, the Worst average power (Unit: dBm) is shown as below.

**<WLAN 2.4G>**

| **Mode** | **802.11b (1Mbps)** | | |
|---|---|---|---|
| **Channel / Frequency (MHz)** | **1 (2412)** | **6 (2437)** | **11 (2462)** |
| Average Power | 18.22 | **18.27** | 18.13 |
| **Mode** | **802.11g (6Mbps)** | | |
| **Channel / Frequency (MHz)** | **1 (2412)** | **6 (2437)** | **11 (2462)** |
| Average Power | **18.96** | 18.92 | **18.96** |
| **Mode** | **802.11n (HT20) (MCS0)** | | |
| **Channel / Frequency (MHz)** | **1 (2412)** | **6 (2437)** | **11 (2462)** |
| Average Power | 18.38 | **18.61** | 18.33 |
| **Mode** | **802.11n (HT40) (MCS0)** | | |
| **Channel / Frequency (MHz)** | **3 (2422)** | **6 (2437)** | **9 (2452)** |
| Average Power | 14.39 | 14.37 | **14.49** |

**<WLAN 5.2G>**

| **Mode** | **802.11a (6Mbps)** | | | |
|---|---|---|---|---|
| **Channel / Frequency (MHz)** | **36 (5180)** | **40 (5200)** | **44 (5220)** | **48 (5240)** |
| Average Power | **17.02** | 16.89 | 16.72 | 16.66 |
| **Mode** | **802.11n (HT20) (MCS0)** | | | |
| **Channel / Frequency (MHz)** | **36 (5180)** | **40 (5200)** | **44 (5220)** | **48 (5240)** |
| Average Power | **16.63** | 16.54 | 16.42 | 16.54 |
| **Mode** | **802.11n (HT40) (MCS0)** | | | |
| **Channel / Frequency (MHz)** | **38 (5190)** | | **46 (5230)** | |
| Average Power | 13.76 | | **13.81** | |
| **Mode** | **802.11ac (VHT80) (MCS0)** | | | |
| **Channel / Frequency (MHz)** | **42 (5210)** | | | |
| Average Power | **12.02** | | | |

**<WLAN 5.8G>**

| **Mode** | **802.11a (6Mbps)** | | | | |
|---|---|---|---|---|---|
| **Channel / Frequency (MHz)** | **149 (5745)** | **153 (5765)** | **157 (5785)** | **161 (5805)** | **165 (5825)** |
| Average Power | **15.86** | 15.66 | 15.75 | 15.62 | 15.73 |
| **Mode** | **802.11n (HT20) (MCS0)** | | | | |
| **Channel / Frequency (MHz)** | **149 (5745)** | **153 (5765)** | **157 (5785)** | **161 (5805)** | **165 (5825)** |
| Average Power | **15.70** | 15.52 | 15.34 | 15.62 | 15.43 |
| **Mode** | **802.11n (HT40) (MCS0)** | | | | |
| **Channel / Frequency (MHz)** | **151 (5755)** | | | **159 (5795)** | |
| Average Power | **13.00** | | | 12.92 | |
| **Mode** | **802.11ac (VHT80) (MCS0)** | | | | |
| **Channel / Frequency (MHz)** | **155 (5775)** | | | | |
| Average Power | **12.13** | | | | |

**<Bluetooth>**

| **Mode** | **Bluetooth GFSK** | | |
|---|---|---|---|
| **Channel / Frequency (MHz)** | **0 (2402)** | **39 (2441)** | **78 (2480)** |
| Average Power | 8.66 | **9.12** | 8.95 |
| **Mode** | **Bluetooth 8DPSK** | | |
| **Channel / Frequency (MHz)** | **0 (2402)** | **0 (2402)** | **0 (2402)** |
| Average Power | 8.22 | 8.84 | **9.08** |
| **Mode** | **Bluetooth LE 1M** | | |
| **Channel / Frequency (MHz)** | **0 (2402)** | **0 (2402)** | **0 (2402)** |
| Average Power | 6.29 | **6.61** | 6.11 |
| **Mode** | **Bluetooth LE 2M** | | |
| **Channel / Frequency (MHz)** | **0 (2402)** | **19 (2440)** | **39 (2480)** |
| Average Power | 6.00 | **6.34** | 5.83 |

## 8.3. SAR Testing Results

### 8.3.1. SAR Test Reduction Considerations

**<KDB 447498 D01, General RF Exposure Guidance>**

Testing of other required channels within the operating mode of a frequency band is not required when the reported SAR for the mid-band or highest output power channel is:

(1) ≤ 0.8 W/kg or 2.0 W/kg, for 1-g or 10-g respectively, when the transmission band is ≤ 100 MHz

(2) ≤ 0.6 W/kg or 1.5 W/kg, for 1-g or 10-g respectively, when the transmission band is between 100 MHz and 200 MHz

(3) ≤ 0.4 W/kg or 1.0 W/kg, for 1-g or 10-g respectively, when the transmission band is ≥ 200 MHz

**<KDB 248227 D01, SAR Guidance for Wi-Fi Transmitters>**

(1) For handsets operating next to ear, hotspot mode or mini-tablet configurations, the initial test position procedures were applied. The test position with the highest extrapolated peak SAR will be used as the initial test position. When the reported SAR of initial test position is <= 0.4 W/kg, SAR testing for remaining test positions is not required. Otherwise, SAR is evaluated at the subsequent highest peak SAR positions until the reported SAR result is <= 0.8 W/kg or all test positions are measured.

(2) For WLAN 2.4 GHz, the highest measured maximum output power channel for DSSS was selected for SAR measurement. When the reported SAR is <= 0.8 W/kg, no further SAR testing is required. Otherwise, SAR is evaluated at the next highest measured output power channel. When any reported SAR is > 1.2 W/kg, SAR is required for the third channel. For OFDM modes (802.11g/n), SAR is not required when the highest reported SAR for DSSS is adjusted by the ratio of OFDM to DSSS specified maximum output power and it is <= 1.2 W/kg.

(3) For WLAN 5 GHz, the initial test configuration was selected according to the transmission mode with the highest maximum output power. When the reported SAR of initial test configuration is > 0.8 W/kg, SAR is required for the subsequent highest measured output power channel until the reported SAR result is <= 1.2 W/kg or all required channels are measured. For other transmission modes, SAR is not required when the highest reported SAR for initial test configuration is adjusted by the ratio of subsequent test configuration to initial test configuration specified maximum output power and it is <= 1.2 W/kg.

**<Antenna Location>**

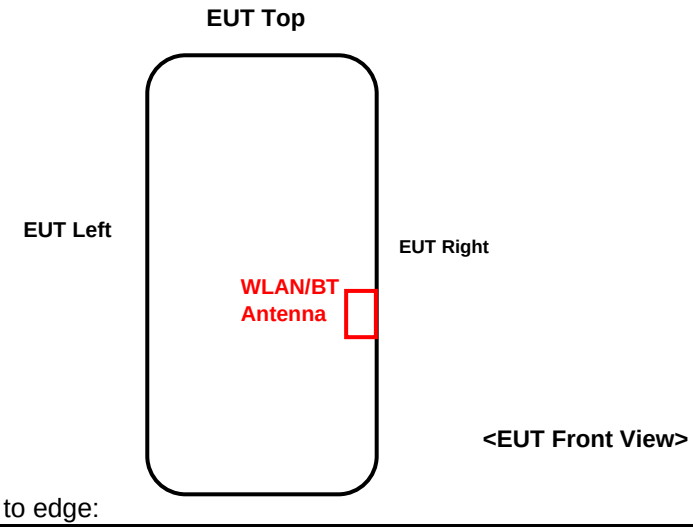


The separation distance for antenna to edge:

| Antenna | To Left Side (mm) | To Right Side (mm) | To Top Side (mm) | To Bottom Side (mm) |
|---|---|---|---|---|
| WLAN / BT | 25 | 5.4 | 85 | 32.5 |

### 8.3.2.SAR Results for Body Exposure Condition (Separation Distance is 1 cm Gap)

| Plot No. | Band | Mode | Test Position | Separation Distance (cm) | Ch. | Max. Tune-up Power (dBm) | Measured Conducted Power (dBm) | Scaling Factor | Power Drift (dB) | Measured SAR-1g (W/kg) | Scaled SAR-1g (W/kg) |
|---|---|---|---|---|---|---|---|---|---|---|---|
| | 802.11b | - | Front Face | 1 | 6 | 18.5 | 18.27 | 1.05 | 0.09 | 0.101 | 0.11 |
| | 802.11b | - | Rear Face | 1 | 6 | 18.5 | 18.27 | 1.05 | 0.05 | 0.02 | 0.02 |
| | 802.11b | - | Left Side | 1 | 6 | 18.5 | 18.27 | 1.05 | 0.02 | 0.06 | 0.06 |
| 1 | 802.11b | - | Right Side | 1 | 6 | 18.5 | 18.27 | 1.05 | 0.12 | 0.279 | **0.29** |
| | 802.11a | - | Front Face | 1 | 36 | 17.5 | 17.02 | 1.12 | 0.02 | 0.096 | 0.11 |
| | 802.11a | - | Rear Face | 1 | 36 | 17.5 | 17.02 | 1.12 | 0.02 | 0.028 | 0.03 |
| | 802.11a | - | Left Side | 1 | 36 | 17.5 | 17.02 | 1.12 | 0.03 | 0.086 | 0.10 |
| 2 | 802.11a | - | Right Side | 1 | 40 | 17.5 | 17.02 | 1.12 | -0.14 | 0.484 | **0.54** |
| | 802.11a | - | Front Face | 1 | 149 | 16.0 | 15.86 | 1.03 | -0.03 | 0.241 | 0.25 |
| | 802.11a | - | Rear Face | 1 | 149 | 16.0 | 15.86 | 1.03 | -0.04 | 0.055 | 0.06 |
| | 802.11a | - | Left Side | 1 | 149 | 16.0 | 15.86 | 1.03 | 0.06 | 0.096 | 0.10 |
| 3 | 802.11a | - | Right Side | 1 | 149 | 16.0 | 15.86 | 1.03 | -0.06 | 0.903 | **0.93** |
| | 802.11a | - | Right Side | 1 | 157 | 16.0 | 15.75 | 1.06 | 0.05 | 0.871 | 0.92 |
| | 802.11a | - | Right Side | 1 | 165 | 16.0 | 15.73 | 1.06 | 0.07 | 0.861 | 0.92 |
| | 802.11a | - | Right Side | 1 | 149 | 16.0 | 15.86 | 1.03 | 0.06 | 0.899 | 0.93 |
| | BT | GFSK | Front Face | 1 | 39 | 9.5 | 9.12 | 1.09 | 0.02 | 0.015 | 0.02 |
| | BT | GFSK | Rear Face | 1 | 39 | 9.5 | 9.12 | 1.09 | 0.08 | ＜0.01 | ＜0.01 |
| | BT | GFSK | Left Side | 1 | 39 | 9.5 | 9.12 | 1.09 | 0.05 | 0.00881 | 0.01 |
| 4 | BT | GFSK | Right Side | 1 | 39 | 9.5 | 9.12 | 1.09 | 0.05 | 0.041 | **0.04** |

### 8.3.3.SAR Results for Extremity Exposure Condition (Separation Distance is 0 cm Gap)

| Plot No. | Band | Mode | Test Position | Separation Distance (cm) | Ch. | Max. Tune-up Power (dBm) | Measured Conducted Power (dBm) | Scaling Factor | Power Drift (dB) | Measured SAR-10g (W/kg) | Scaled SAR-10g (W/kg) |
|---|---|---|---|---|---|---|---|---|---|---|---|
| | 802.11b | - | Front Face | 0 | 6 | 18.5 | 18.27 | 1.05 | 0.09 | 0.365 | 0.38 |
| | 802.11b | - | Rear Face | 0 | 6 | 18.5 | 18.27 | 1.05 | 0.00 | 0.071 | 0.07 |
| | 802.11b | - | Left Side | 0 | 6 | 18.5 | 18.27 | 1.05 | 0.01 | 0.209 | 0.22 |
| 5 | 802.11b | - | Right Side | 0 | 6 | 18.5 | 18.27 | 1.05 | 0.14 | 0.774 | **0.82** |
| | 802.11a | - | Front Face | 0 | 36 | 17.5 | 17.02 | 1.12 | 0.05 | 0.135 | 0.15 |
| | 802.11a | - | Rear Face | 0 | 36 | 17.5 | 17.02 | 1.12 | 0.08 | 0.00284 | 0.00 |
| | 802.11a | - | Left Side | 0 | 36 | 17.5 | 17.02 | 1.12 | 0.06 | 0.192 | 0.21 |
| 6 | 802.11a | - | Right Side | 0 | 36 | 17.5 | 17.02 | 1.12 | 0.09 | 1.8 | **2.01** |
| | 802.11a | - | Right Side | 0 | 40 | 17.5 | 16.89 | 1.15 | 0.05 | 1.73 | 1.99 |
| | 802.11a | - | Right Side | 0 | 48 | 17.5 | 16.66 | 1.21 | 0.05 | 1.62 | 1.97 |
| | 802.11a | - | Front Face | 0 | 149 | 16.0 | 15.86 | 1.03 | 0.04 | 0.118 | 0.12 |
| | 802.11a | - | Rear Face | 0 | 149 | 16.0 | 15.86 | 1.03 | 0.05 | 0.00245 | 0.00 |
| | 802.11a | - | Left Side | 0 | 149 | 16.0 | 15.86 | 1.03 | 0.06 | 0.168 | 0.17 |
| 7 | 802.11a | - | Right Side | 0 | 149 | 16.0 | 15.86 | 1.03 | 0.08 | 1.73 | **1.79** |
| | BT | GFSK | Front Face | 1 | 39 | 9.5 | 9.12 | 1.09 | 0.03 | 0.051 | 0.06 |
| | BT | GFSK | Rear Face | 1 | 39 | 9.5 | 9.12 | 1.09 | 0.08 | 0.01 | 0.01 |
| | BT | GFSK | Left Side | 1 | 39 | 9.5 | 9.12 | 1.09 | 0.05 | 0.029 | 0.03 |
| 8 | BT | GFSK | Right Side | 1 | 39 | 9.5 | 9.12 | 1.09 | -0.08 | 0.108 | **0.12** |

**8.3.4. SAR Measurement Variability**

According to KDB 865664 D01, SAR measurement variability was assessed for each frequency band, which is determined by the SAR probe calibration point and tissue-equivalent medium used for the device measurements. When both head and body tissue-equivalent media are required for SAR measurements in a frequency band, the variability measurement procedures should be applied to the tissue medium with the highest measured SAR, using the highest measured SAR configuration for that tissue-equivalent medium. Alternatively, if the highest measured SAR for both head and body tissue-equivalent media are ≤ 1.45 W/kg and the ratio of these highest SAR values, i.e., largest divided by smallest value, is ≤ 1.10, the highest SAR configuration for either head or body tissue-equivalent medium may be used to perform the repeated measurement. These additional measurements are repeated after the completion of all measurements requiring the same head or body tissue-equivalent medium in a frequency band. The test device should be returned to ambient conditions (normal room temperature) with the battery fully charged before it is re-mounted on the device holder for the repeated measurement(s) to minimize any unexpected variations in the repeated results.

SAR repeated measurement procedure:

1. When the highest measured SAR is < 0.80 W/kg, repeated measurement is not required.
2. When the highest measured SAR is >= 0.80 W/kg, repeat that measurement once.
3. If the ratio of largest to smallest SAR for the original and first repeated measurements is > 1.20, or when the original or repeated measurement is >= 1.45 W/kg, perform a second repeated measurement.
4. If the ratio of largest to smallest SAR for the original, first and second repeated measurements is > 1.20, and the original, first or second repeated measurement is >= 1.5 W/kg, perform a third repeated measurement.

| Band | Test Position | Ch. | Original Measured SAR-1g (W/kg) | 1st Repeated SAR-1g (W/kg) | L/S Ratio | 2nd Repeated SAR-1g (W/kg) | L/S Ratio | 3rd Repeated SAR-1g (W/kg) | L/S Ratio |
|---|---|---|---|---|---|---|---|---|---|
| 802.11a | Right Side | 149 | 0.903 | 0.899 | 1.00 | N/A | N/A | N/A | N/A |

**Test Engineer:** Warren Xiong,

## 8.3.5. Appendixes

**All attachments are integral parts of this test report. This applies especially to the following appendix:**

**Appendix A: SAR Plots of System Verification**

The plots for system verification with largest deviation for each SAR system combination are shown as follows.

**Appendix B: SAR Plots of SAR Measurement**

The SAR plots for highest measured SAR in each exposure configuration, wireless mode and frequency band combination, and measured SAR > 1.5 W/kg are shown as follows.

**Appendix C: Calibration Certificate for probe and Dipole**

**Appendix D: Setup photos**

Test Laboratory: TÜV Rheinland (Shenzhen) Co., Ltd. Date: 2023/8/1

## System Check-D2450V2_H2450

### DUT: Dipole 2450 MHz D2450V2 SN:1014

Communication System: CW; Frequency: 2450 MHz;Duty Cycle: 1:1
Medium: H2450 Medium parameters used: f = 2450 MHz; $\sigma$ = 1.872 S/m; $\varepsilon_r$ = 38.153; $\rho$ = 1000 kg/m$^3$

DASY5 Configuration:
- Probe: EX3DV4 - SN7506; ConvF(7.98, 7.98, 7.98) @ 2450 MHz; Calibrated: 2023/6/29
- Sensor-Surface: 1.4mm (Mechanical Surface Detection)
- Electronics: DAE4 Sn662; Calibrated: 2023/3/8
- Phantom: SAM 1; Type: QD 000 P40 CB; Serial: 1961
- Measurement SW: DASY52, Version 52.10 (4); SEMCAD X Version 14.6.14 (7483)

**Pin=250 mW/Area Scan (71x71x1):** Interpolated grid: dx=1.200 mm, dy=1.200 mm
Maximum value of SAR (interpolated) = 22.6 W/kg

**Pin=250 mW/Zoom Scan (7x7x7)/Cube 0:** Measurement grid: dx=5mm, dy=5mm, dz=5mm
Reference Value = 113.7 V/m; Power Drift = 0.01 dB
Peak SAR (extrapolated) = 28.2 W/kg
**SAR(1 g) = 13.5 W/kg; SAR(10 g) = 6.27 W/kg**
Smallest distance from peaks to all points 3 dB below = 9 mm
Ratio of SAR at M2 to SAR at M1 = 48.4%
Maximum value of SAR (measured) = 22.7 W/kg

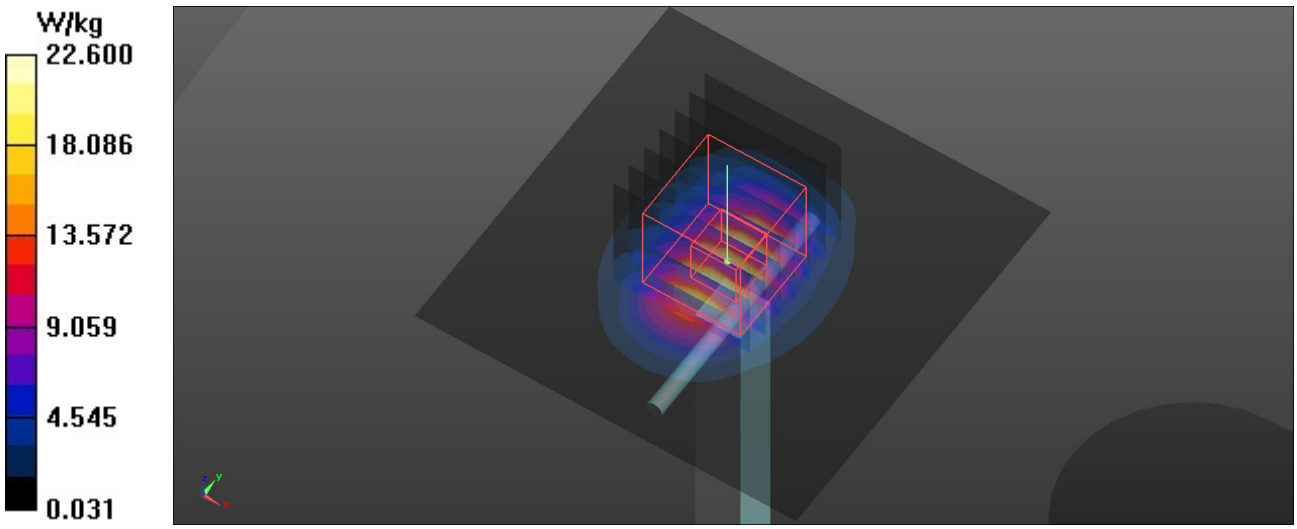

## System Check-D5GHz_H5250

### DUT: Dipole D5GHzV2 SN:1280

Communication System: CW; Frequency: 5250 MHz;Duty Cycle: 1:1
Medium: H5G Medium parameters used: f = 5250 MHz; $\sigma$ = 4.735 S/m; $\varepsilon_r$ = 36.296; $\rho$ = 1000 kg/m$^3$

DASY5 Configuration:
- Probe: EX3DV4 - SN7506; ConvF(5.48, 5.48, 5.48) @ 5250 MHz; Calibrated: 2023/6/29
- Sensor-Surface: 1.4mm (Mechanical Surface Detection)
- Electronics: DAE4 Sn662; Calibrated: 2023/3/8
- Phantom: SAM 1; Type: QD 000 P40 CB; Serial: 1961
- Measurement SW: DASY52, Version 52.10 (4); SEMCAD X Version 14.6.14 (7483)

**Pin=100mW/Area Scan (91x91x1):** Interpolated grid: dx=1.000 mm, dy=1.000 mm
Maximum value of SAR (interpolated) = 18.8 W/kg
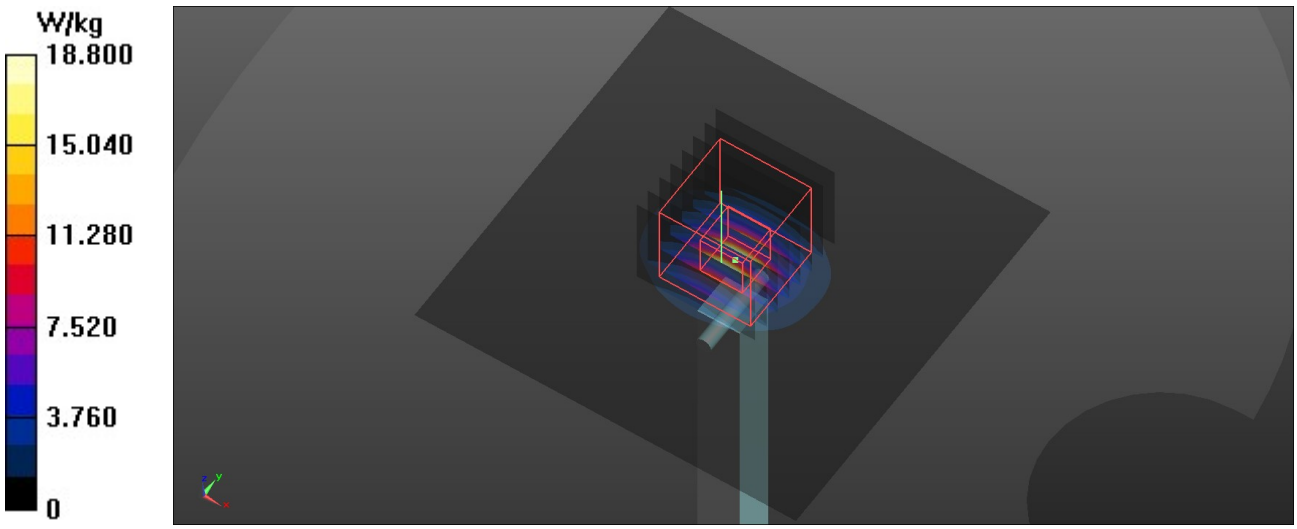
**Pin=100mW/Zoom Scan (8x8x7)/Cube 0:** Measurement grid: dx=4mm, dy=4mm, dz=1.4mm
Reference Value = 72.64 V/m; Power Drift = -0.04 dB
Peak SAR (extrapolated) = 33.0 W/kg
**SAR(1 g) = 8.15 W/kg; SAR(10 g) = 2.32 W/kg**
Smallest distance from peaks to all points 3 dB below = 7.2 mm
Ratio of SAR at M2 to SAR at M1 = 65.1%
Maximum value of SAR (measured) = 18.8 W/kg