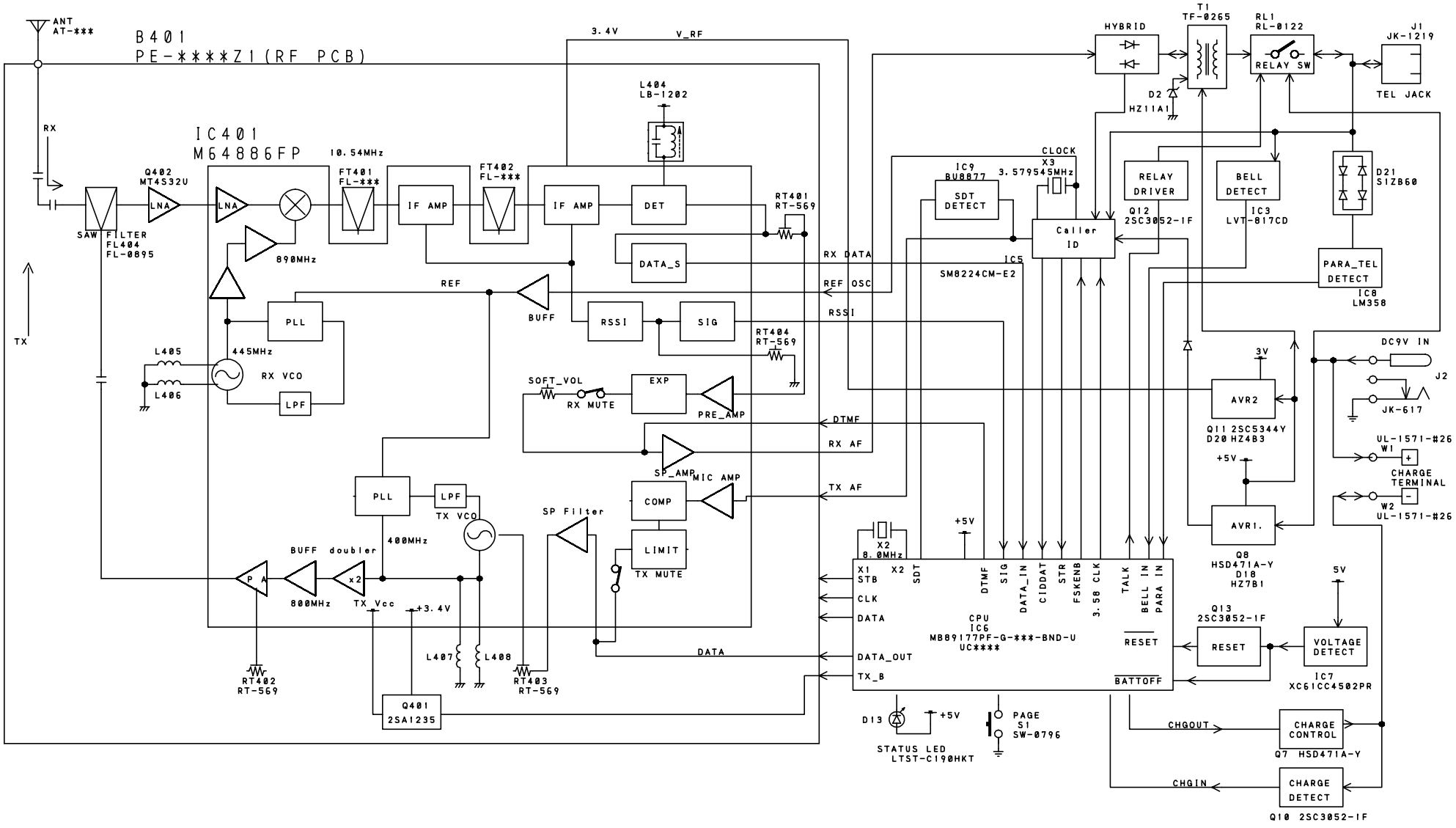

DESIGN	DRAWN. BY	UNIDEN No.	MODEL No.
02/07/30	02/09/10	UP009BH	EXT3165
HOSAKA	OHNOY	TITLE BASE BLOCK DIAGRAM	
CHECK. BY	APPRO. BY		
		DRAWING No.	
REV. No		UNIDEN CORP.	