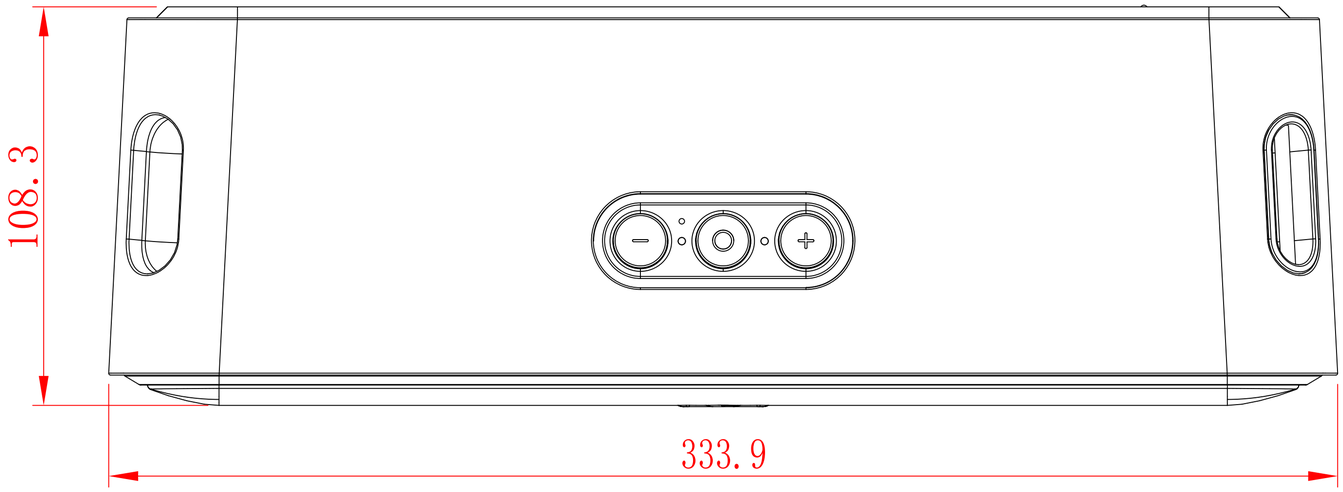

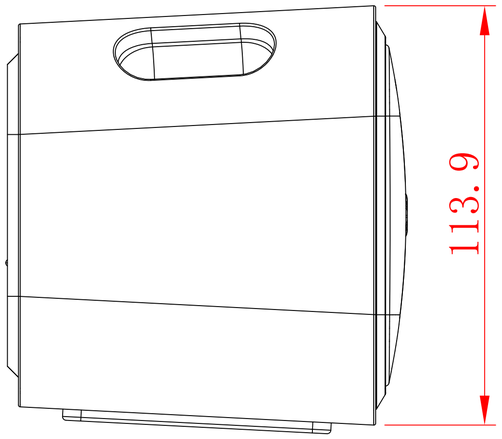

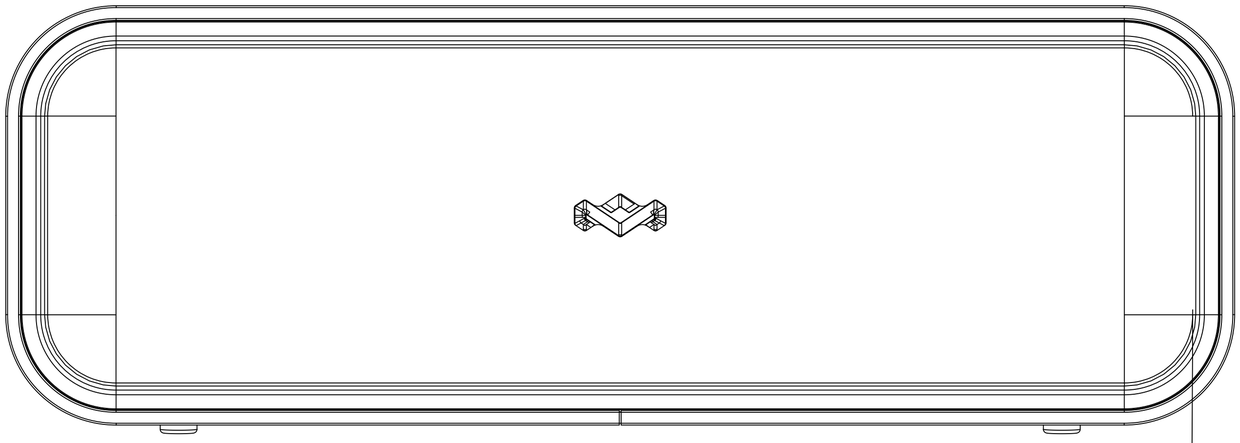

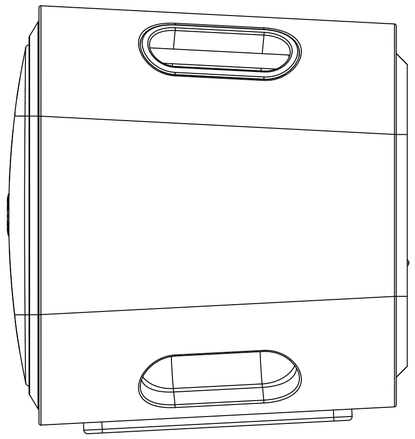

L334*W108*H114mm