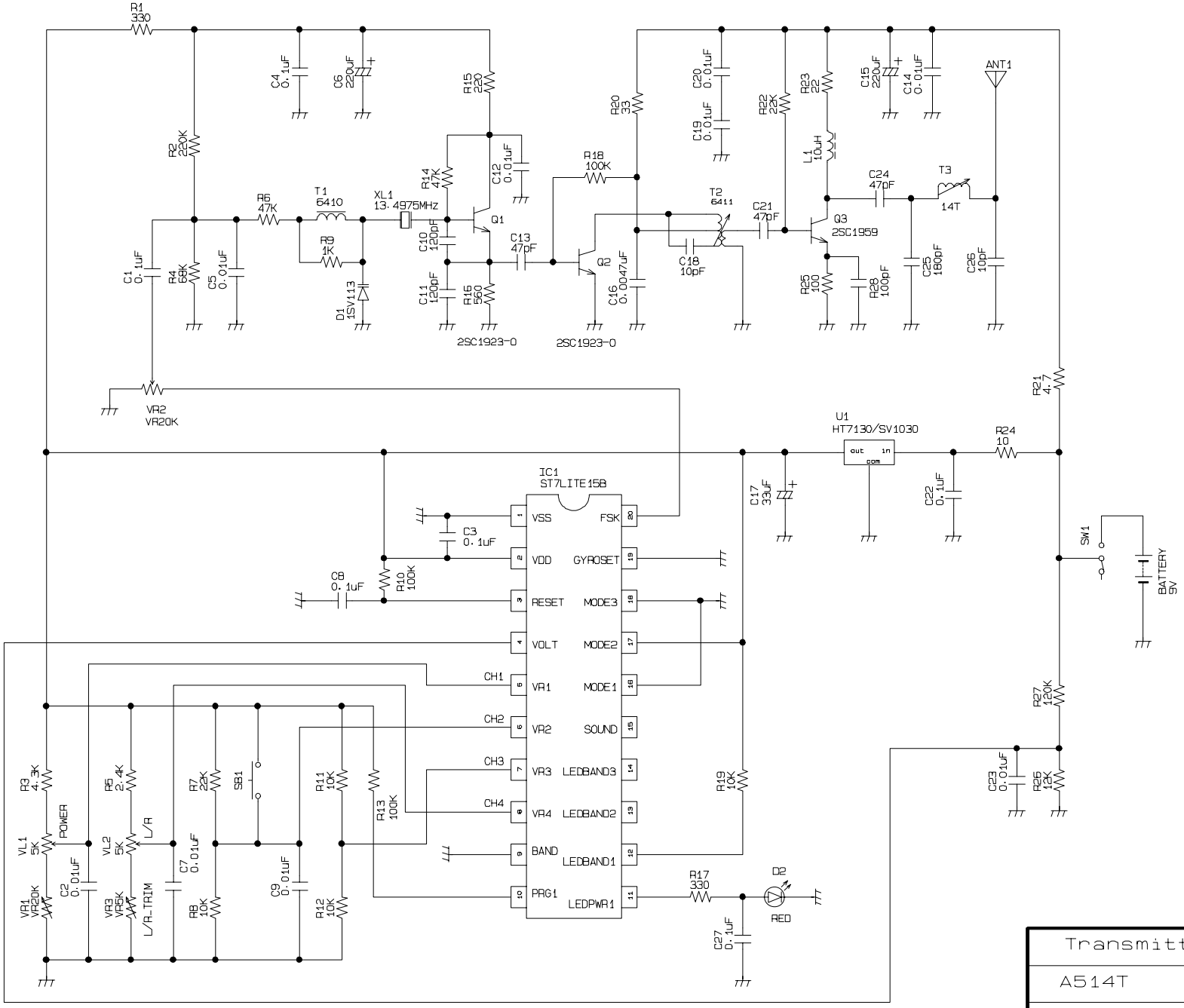

Transmitter	
A514T	
Drawing No. T1298	TAIYO KOGYO CO., LTD