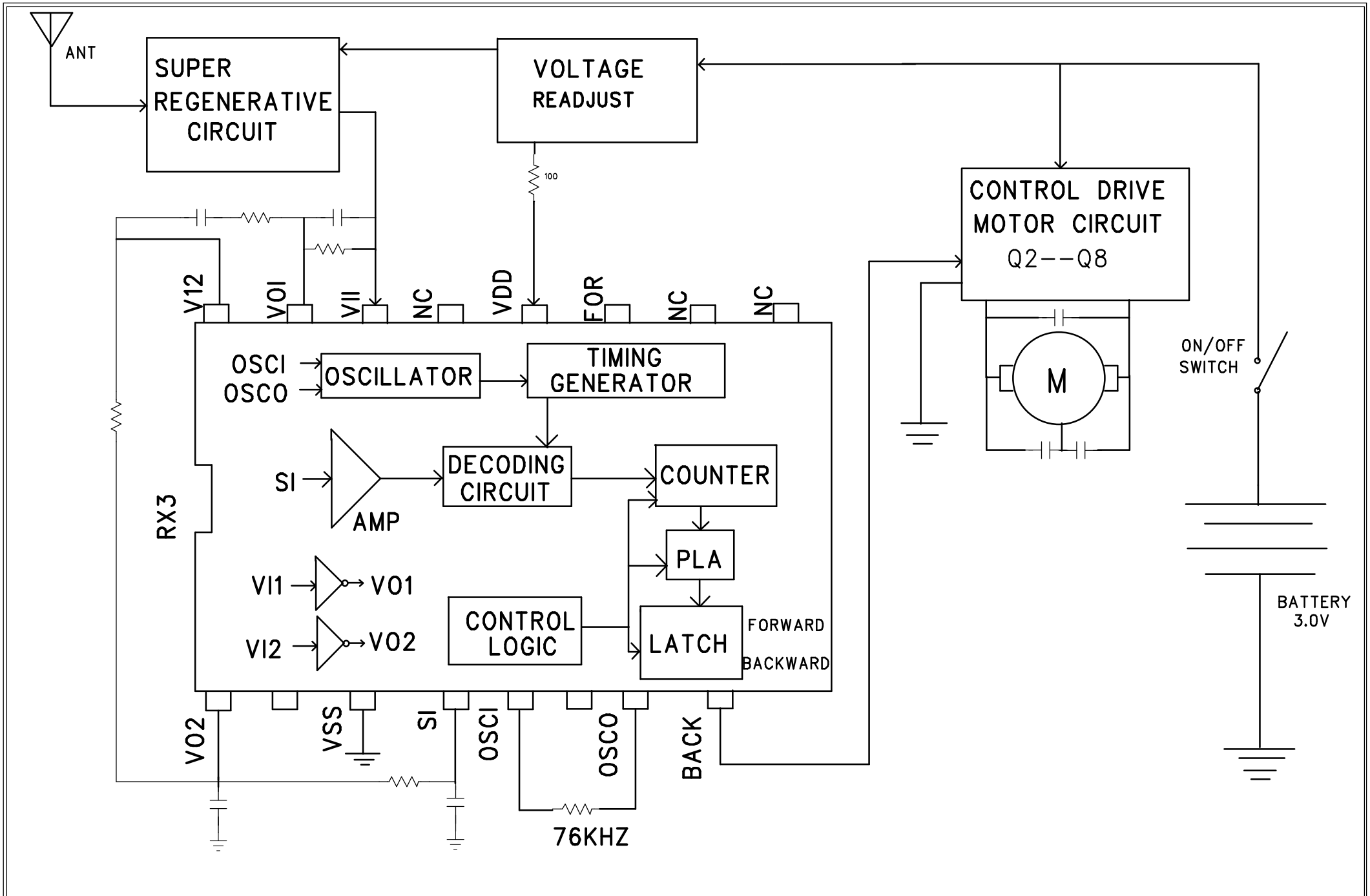

LUNG CHEONG	TITLE:	E822 RX 49MHz	DESIGN BY:	DRAWING BY:	APPROVED BY:	SHEET:
	FUNCTION:	CATERPILLAR RECEIVER		QW SHI		1 of 1
	DWG NO:	DZ02-00E822-01		2005-05-14		