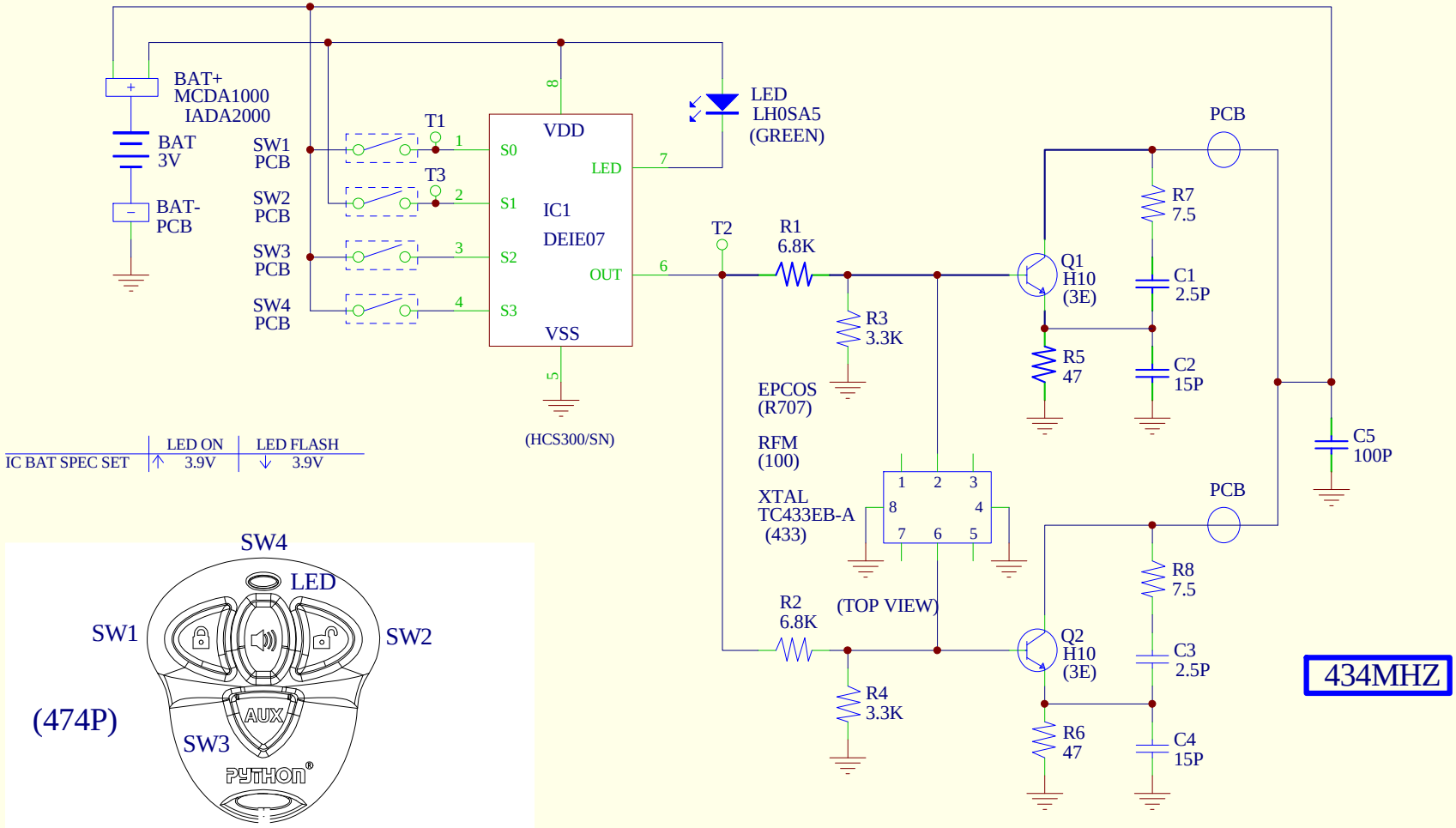

IC BAT SPEC SET	LED ON	LED FLASH
	↑ 3.9V	↓ 3.9V

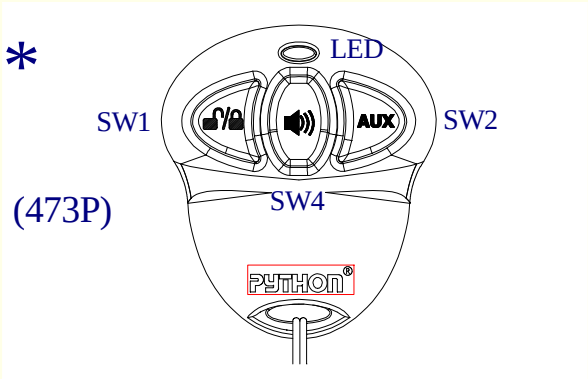

Directed Electronics Inc.
One Viper Way
Vista, CA 92083
Phone: 760-598-6200 *Fax: 760-598-6400*

Title: **474P / 473P**		**Appd By**	Minas Minasian
		Date	12/13/01
Size: **A**	Number: **DTAC**	Revision: **A**	**Chkd By** Tyson M
			Date 11/30/01
			Drwn By Minas Minasian
Date Code:	Sheet 1 of 1		**Date** 11/30/02

File: X:\DRAWINGS\CURRENT\Security\TX\473_474.Ddb - Documents\DTACB.SCH