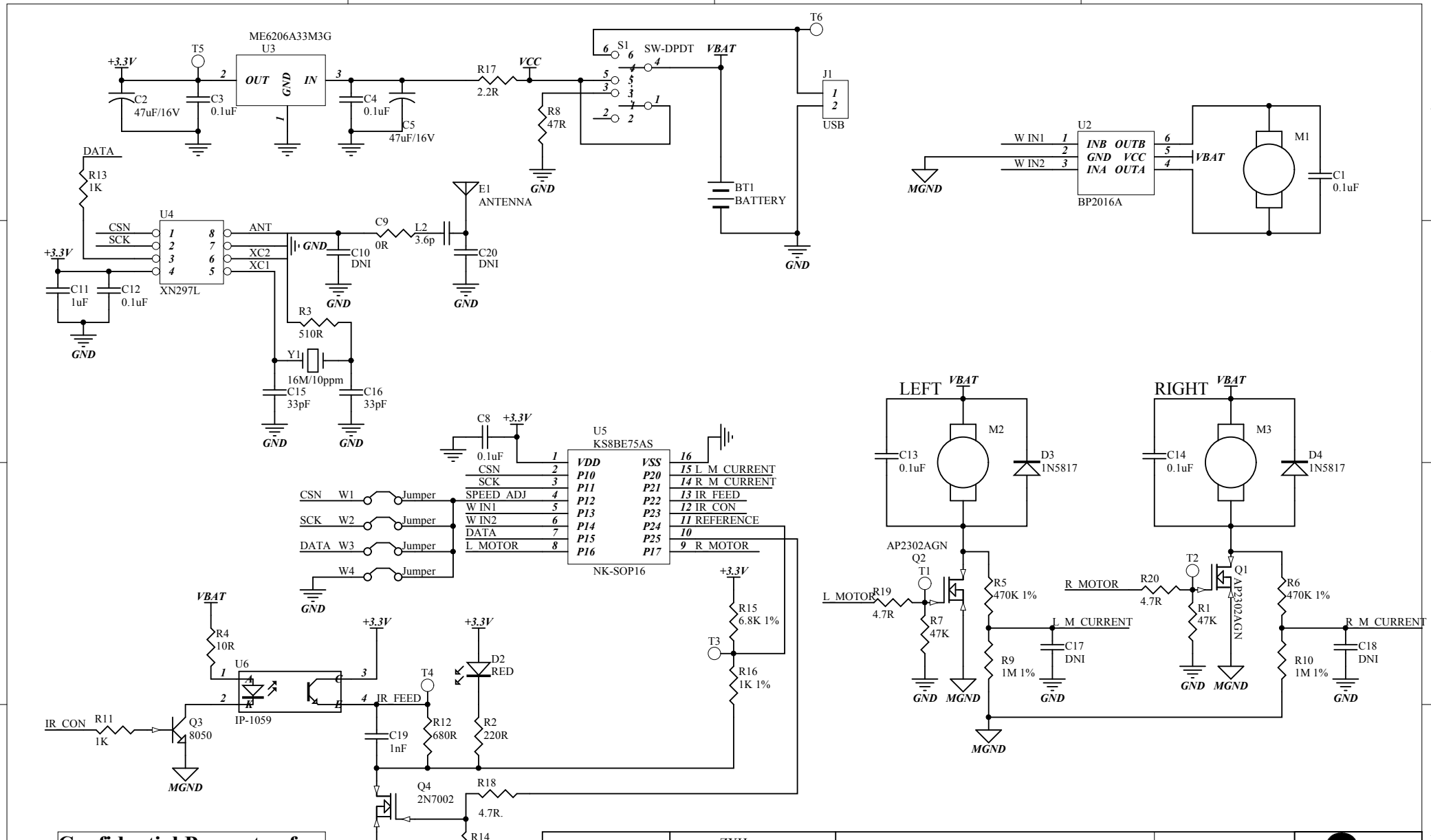

Confidential Property of Jetta Company Ltd.

Drawn By:	ZXH
Checked By:	CLF
Approved By:	LLF

Title: ***2.4G RX***

Jetta (China) Co. Ltd.

Size: A4 | Number: **DNM63** | Revision: 02

Corresponding PCB :

Date: 2016/4/5 | Time: 09:05:08 | Sheet* of *

File: D:\Users\xhzhang02\zxh1\2015 project\DNM63\DNM63 RX(02-00)\DNM63 RX V02.SchDoc

JETTA COMPANY LIMITED