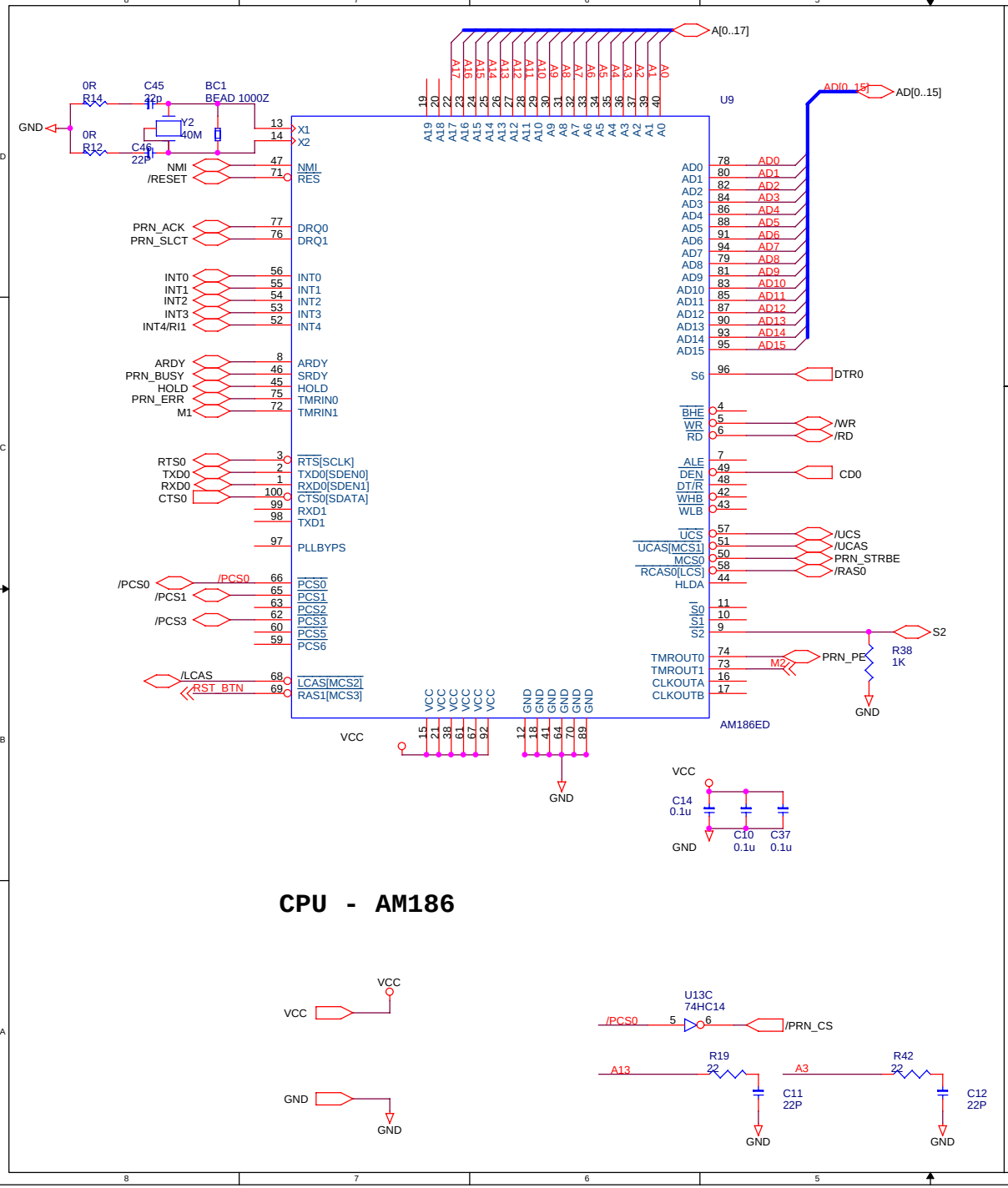

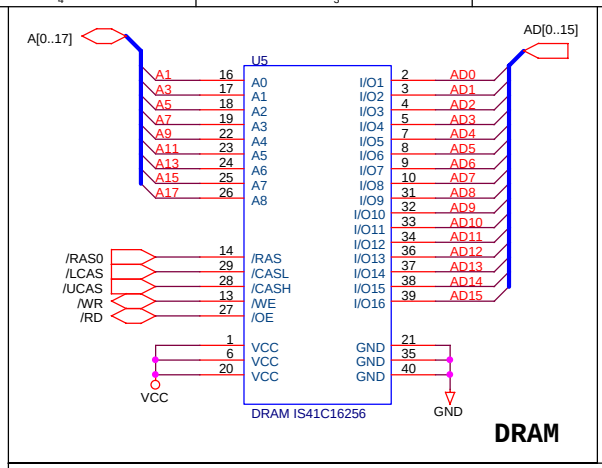

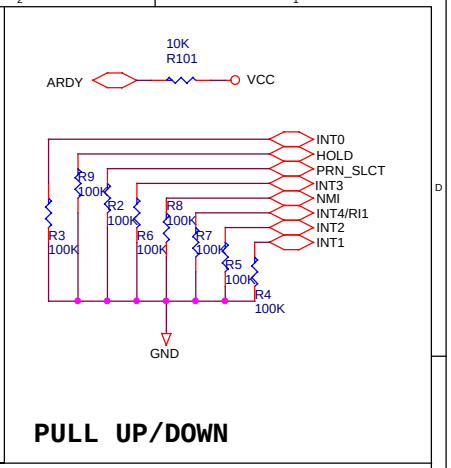

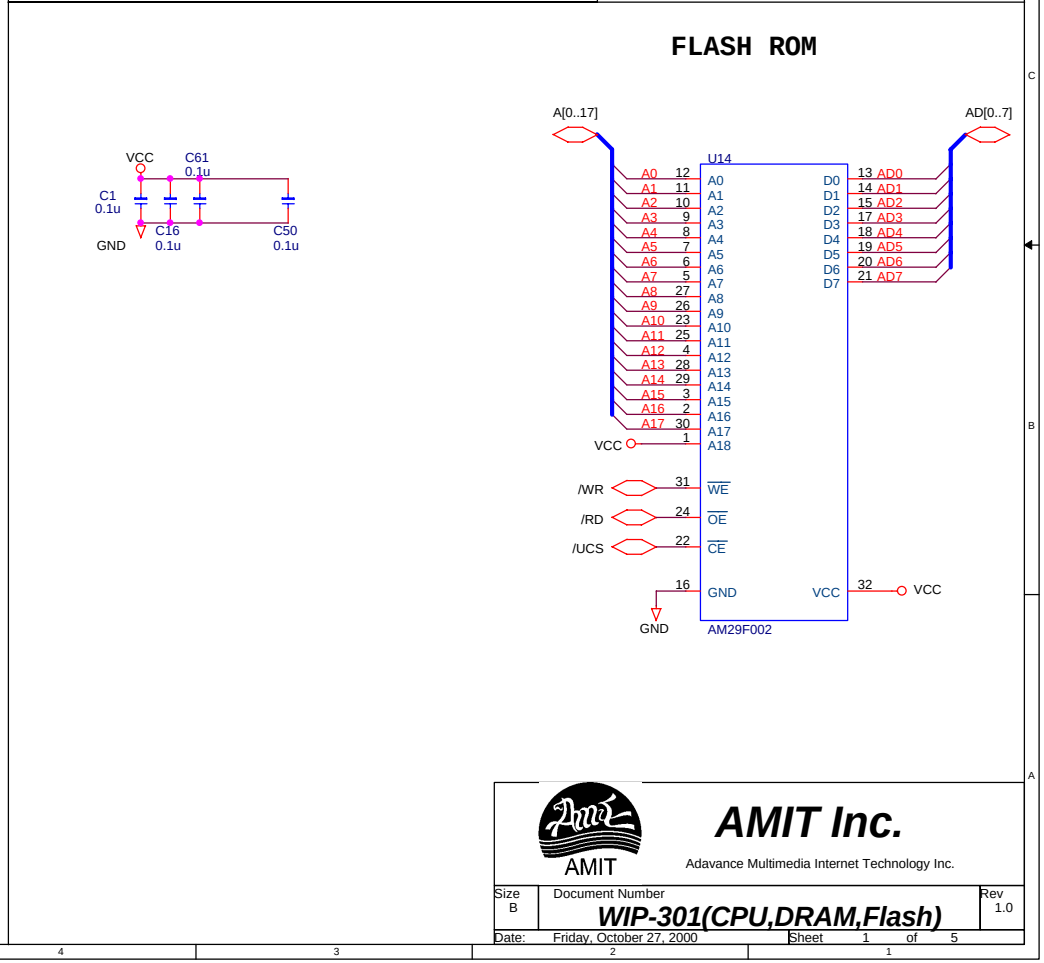

AMIT Inc.

AMIT

Adavance Multimedia Internet Technology Inc.

Size	Document Number	Rev
B	WIP-301(CPU,DRAM,Flash)	1.0

Date: Friday, October 27, 2000 Sheet 1 of 5