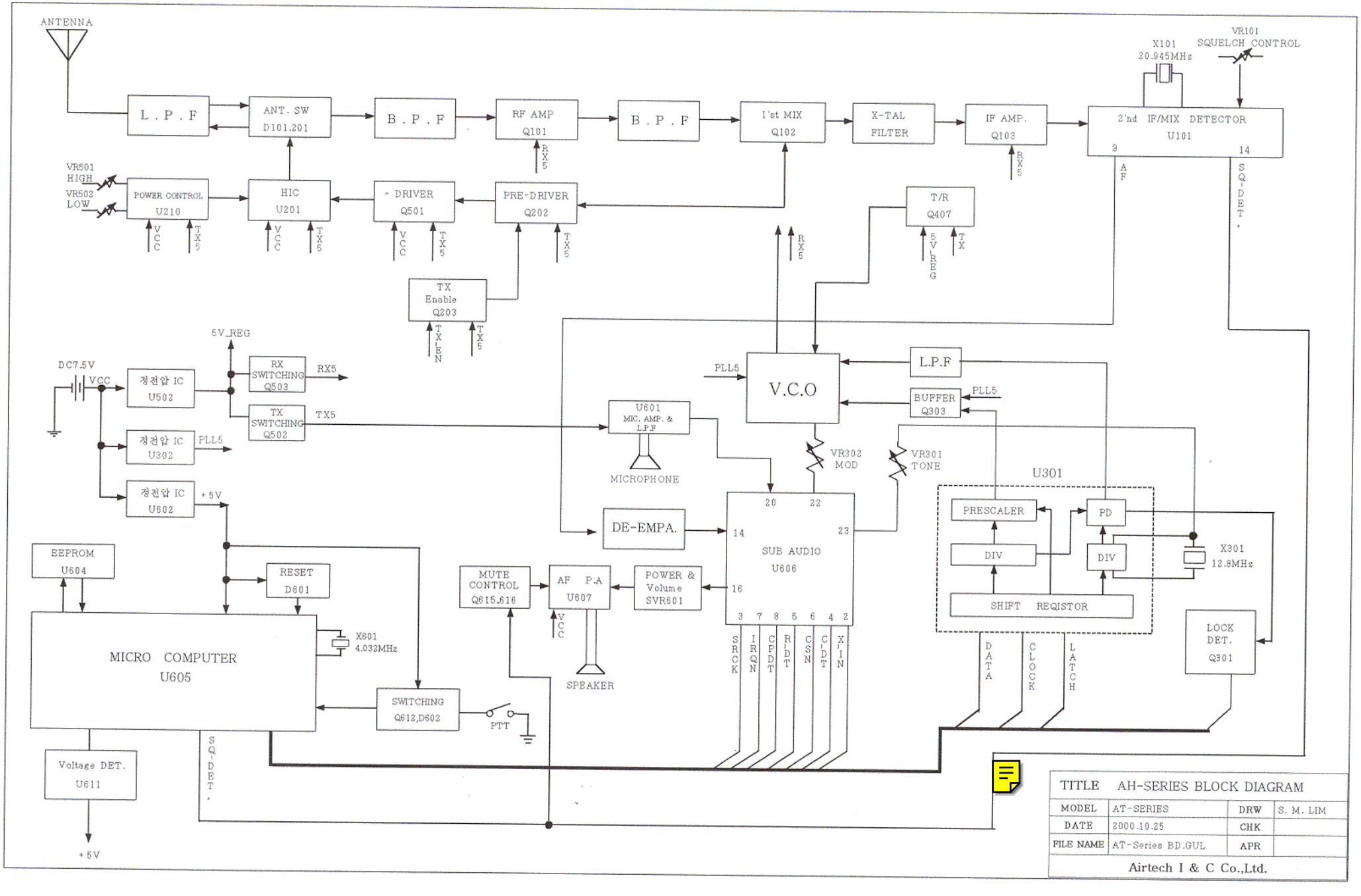

TITLE	AH-SERIES BLOCK DIAGRAM		
MODEL	AT-SERIES	DRW	S. M. LIM
DATE	2000.10.25	CHK	
FILE NAME	AT-Series BD.GUL	APR	

Airtech I & C Co.,Ltd.