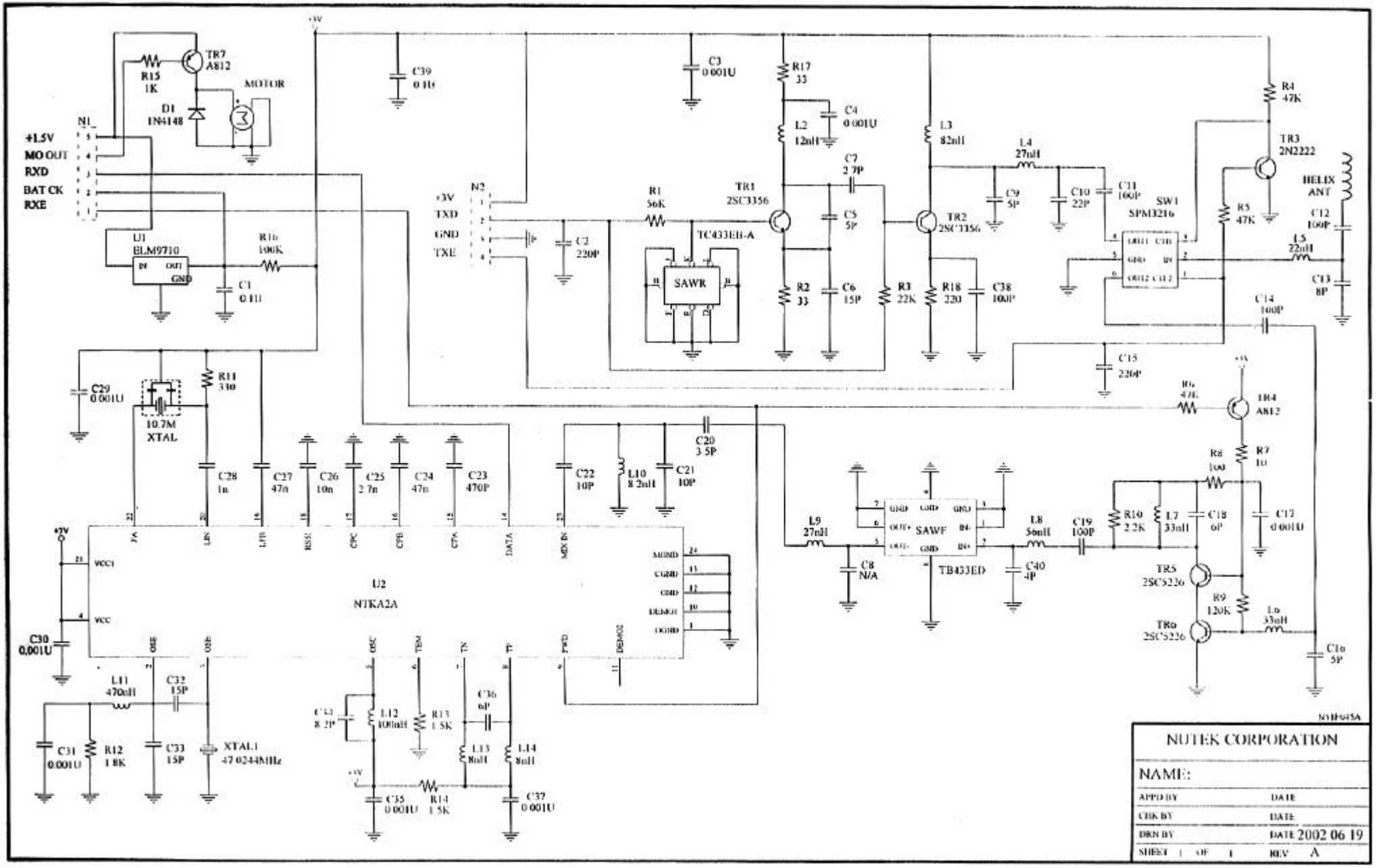
+1.5V
MO OUT
RXD
BAT CK
RXE
N1
TR7
A812
R15
1K
D1
1N4148
MOTOR
U1
BLM9710
IN
OUT
GND
R16
100K
C1
0.1U
C39
0.1U
+3V
N2
TXD
GND
TXE
C2
220P
C3
0.001U
R17
33
C4
0.001U
L2
12nH
R1
56K
TR1
2SC3356
TC433EB-A
SAWR
C7
2.7P
C5
5P
R2
33
C6
15P
R3
22K
L3
82nH
TR2
2SC3356
R18
220
C38
100P
C9
5P
L4
27nH
C10
22P
C11
100P
SW1
SPM3216
R4
47K
TR3
2N2222
R5
47K
HELIX
ANT
C12
100P
L5
22nH
C13
8P
C14
100P
C15
220P
R6
47K
TR4
A812
R7
1.0
R8
100
C17
0.001U
C29
0.001U
10.7M
XTAL
R11
330
C28
1n
C27
47n
C26
10n
C25
2.7n
C24
47n
C23
470P
C22
10P
L10
8.2nH
C21
10P
C20
3.5P
U2
NTKA2A
VCC1
VCC
C30
0.001U
L11
470nH
C32
15P
C31
0.001U
R12
1.8K
C33
15P
XTAL1
47.0244MHz
C34
8.2P
L12
100nH
R13
1.5K
C36
6P
L13
8nH
L14
8nH
C35
0.001U
R14
1.5K
C37
0.001U
L9
27nH
C8
N/A
SAWF
TB433ED
C40
4P
L8
56nH
C19
100P
R10
2.2K
L7
33nH
C18
6P
TR5
2SC5226
R9
120K
L6
33nH
TR6
2SC5226
C16
5P
NUTEK CORPORATION
NAME:
APPD BY
DATE
CHK BY
DATE
DRN BY
DATE 2002 06 19
SHEET 1 OF 1
REV A