10/100 Fast Ethernet
Plus 56K Fax/Modem
Integrated PC Card

Quick Installation Guide

1. INSTALLATION

The quick installation guide describes how to install your Intergared PC Card in major popular Network Operating Systems. And more can be found in detail manual diskette .

1.1. HARDWARE INSTALLATION

1. Hold the card label up and insert the card into the computer's PCMCIA slot with the 68 pin connector facing the computer.
2. Connect the RJ-45 (8-pin) plug to the LAN and the RJ-11 (6-pin) plug to the telephone wall outlet.

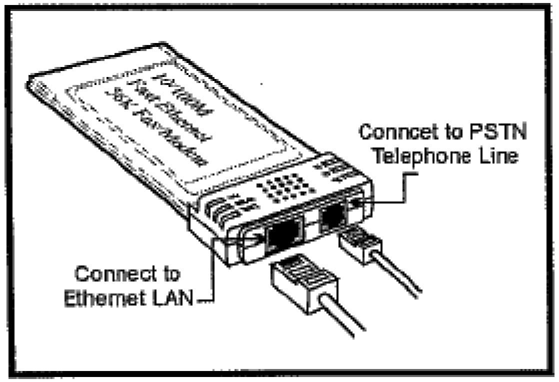
10/100M Fast Ethernet 56K Fax/Modem
Conncet to PSTN Telephone Line
Connect to Ethernet LAN

1.2. INSTALLING THE SOFTWARE

1.2.1. Windows 95 Installation

1.Assume that the PCMCIA card reader and drivers have been loaded and well functioning. The **System** Icon in the **Control Panel** can report on its functionality. If not, check your computer dealer for technical support.

2.Insert your PC Card into PCMCIA slot. Windows 95 will prompt **New Hardware Found** dialog box. In **New Hardware Found** dialog box, select **Driver from disk provided by hardware manufacturer.**

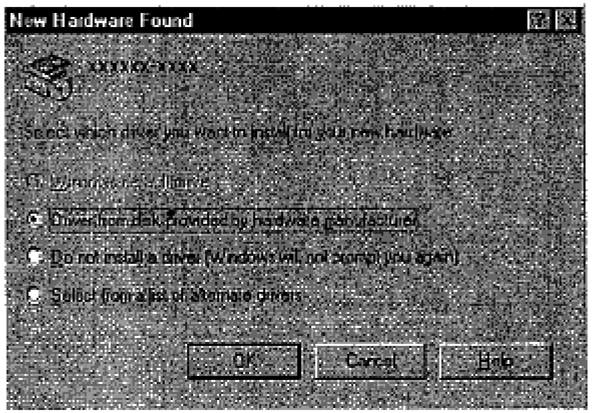
New Hardware Found
Do not install a driver (Windows will not prompt you again)
Select from a list of alternate drivers
OK
Cancel
Help

3.Enter the correct path, i.e. "A:\", then insert the driver disk. The driver will be installed automatically, and system may ask for the Windows 95 installation CD disks to update the existing files or drivers. After the update, system will reboot automatically.

4.For the first time installation, click **Network** icon in **Control Panel** to correctly add Protocols, Client and Service according to your application requirements.

5.Reboot the machine and the card will fully function.

1.2.2. Working with Windows 98

1. Turn on your computer.
2. Insert your PC Card into the free PCMCIA slot, and make sure it is firmly seated.
3. Windows 98 will prompt **New Hardware Found** then **Add New Hardware Wizard** dialog box. Click **Next.**

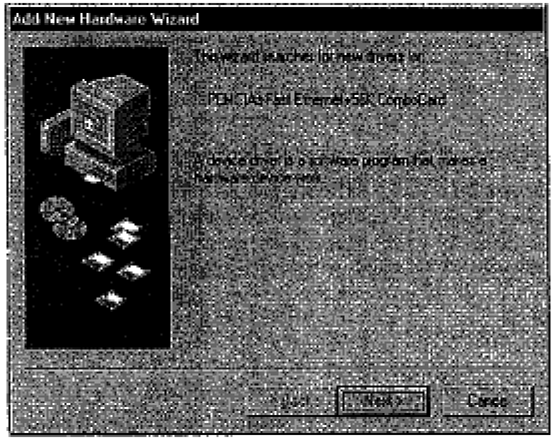
Add New Hardware Wizard
Next >
Cancel

4. Select "**Search for the best driver for your device (Recommended)**", then click **Next.**

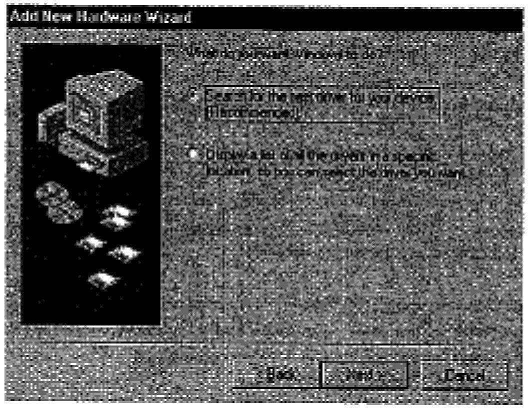

5. Insert the driver disk, select "**Floppy disk drives**", then click **Next.**

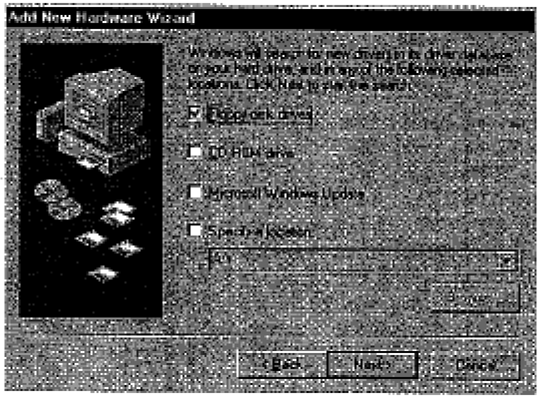

☑ Floppy disk drives
☐ CD-ROM drive
☐ Microsoft Windows Update
☐ Specify a location

6.Reboot the machine and the card will fully function.

1.2.3. NT 4.0 Installation

Installation in NT 4.0

1. Insert the PC Card into one of the PCMCIA Slots
2 Start Windows NT 4.0 and login with a full access level **ADMINISTRATOR**
3. Open **MY COMPUTER → CONTROL PANEL → NETWORK.**

If **Network** has not been installed,

- Select **YES** to start Network installation,
- Press **Next** and press **SELECT FROM LIST** button, then press **HAVE DISK** button,
- Insert the driver disk into drive floppy disk drive, then enter the correct path.
- Select the only one choice for the Direct PortPC Card, then press **OK** and **NEXT**
- Windows NT 4.0 will grant configurations for
  - -- TCP/IP
  - -- NWLink IPX/SPX
  - -- NetBEUI

  These configurations are unique for each network. If you want to change them, ask your network administrator for help.
- Press **Next** twice to use default NETWORK SERVICES settings
- Enter the correct path for NT 4.0 system source files.
- A dialog box will pop up. Give appropriate system resources to the **DirectPort** 10/100 Fast Ethernet + 56K Fax/Modem PC Card; the settings must be unique for this device. Refer to "Resources Recommendation" for NT 3.51 details
- Press **NEXT** twice. Enter **COMPUTER NA** then press **NEXT,** then Press **FINISH**

If **Network** has been installed

- Select **ADAPTERS**
- Press **ADD** to add network adapters
- Press **HAVE DISK** button
- Insert the DirectPort PC Card driver disk into floppy disk drive
- Enter the correct path for Windows NT 4.0 drivers then press **OK.**
- A dialog box will pop up. Give appropriate system resources to the 10/100 Fast Ethernet + 56K Fax/Modem PC Card; the settings must b unique for this device. Refer to "Resources Recommendation" for NT 3.51 details
- Press **OK** when all setting are completed.
- Press **CLOSE** to complete NETWORK setting
- Reboot Windows NT.

Modem configuration for NT 4.0

1. Open **MY COMPUTER → CONTROL PANE → MODEMS**
2. Using default settings and press **NEXT**
3. System should have detected your DirectPort PC Card, and enter the Modem Manufactures & Models list screen.
4. Press **FINISH** and then **CLOSE** to complete modem setting. and reboot the system
5. The installations for both LAN and Modem are completed.

Apple/Macintoch

Your Integrated PC card can also allow you run Apple/Macintoch palteform. Please follow the below procedure carefully to get your PC Card up and running.

System Requirements

In order to let your PC Card perform at more efficient speed, please check your system to meet the following requirement:

✓ **For the following PowerBooks, it requires System7.5.1 or later:**

✓ **For the following PowerBooks, it requires System 7.6.1or later:**

PowerBook 2400, PowerBook 3400, or G3.

✓ **8 MB of RAM installed for System 7.5 or 16 MB for Systems 7.5**

✓ **4 MB of available hard drive space**

Driver Installation

Please follow the following procedure to install the MAC driver:

◆ ***Important Note: Please disable any virus-protection application before you installing the Modem Driver.***

☞ **Turn on your PowerBook computer**

☞ **Insert your Integrated PC Card Driver disk into your floppy disk drive**

☞ **Double-click the "Installer Icon" on the driver disk**

☞ **Click "Install" to install the driver into your hard drive**

☞ **Click "Restart" to re-boot your PowerBook**

Now you are ready to use your Integrated PC Card with your Apple Power Book.

FCC Certification

10/100 Fast Ethernet + 56K Fax/Modem PC Card
FCC ID: MQ4PLM56
Made in Taiwan

The United States Federal Communication Commission (FCC) an the Canadian Department of Communications have establishe certain rules governing the use of modems and other electroni equipment.

FCC Part 68 Registration

This high speed 10/100 Fast Ethernet + 56K FAX/MODEM P Card complies with FCC Part 68 rules, and the use of this mode is subject to the following restrictions:

1. The FCC has established rules which permit this device to b directly connected to the telephone network. Standardized jack are used for these connections. This equipment should not b used on party lines or coin phones.
2. If this device is malfunctioning, it may also be causing harm t the telephone network; this device should be disconnected unti the source of the problem can be determined and until repair ha been made. If this is not done, the telephone company ma temporarily disconnect service.
3. The telephone company may make changes in it's facilitie equipment, operation and procedures; if such changes affect th compatibility or use of this device, the telephone company i required to give adequate notice of the situation with the FCC.
4. If the telephone company requests information on what equipment is connected to their lines, inform them of:
   a. The telephone number to which this unit is connected.
   b. The Ringer Equivalence Number (REN).
   c. The USOC jack required.
   d. The FCC Registration number.

Items (b) and (d) are indicated on the label. The Ringe Equivalence Number (REN) is used to determine how man devices can be connected to your telephone line. In most areas, th sum of the REN's of all the devices on any one line should n exceed 5.0. If too many devices are attached, they may not rin properly.

FCC Part 15 Registration

This device complies with Part 15 of FCC rules. Operation is subject to the following two conditions:

1) This device may not cause harmful interface, and
2) This device must accept any interface received, including interface that may cause undesired operation.

This equipment has been tested and found to comply with the limits for a Class B digital device, pursuant to Part 15 of the FCC Rules. These limits are designed to provide reasonable protection against harmful interference in a residential installation. This equipment generates, uses and can radiate radio frequency energy, and if not installed and used in accordance with the instructions, may cause harmful interference to radio communications. However, there is no guarantee that interference will not occur in a particular installation. If this equipment does cause harmful interference to radio or television reception, which can be determined by turning off and on, the user is encouraged to try to correct the interference by one or more of the following measures:

(1) Reorient or relocate the receiving antenna.
    (a) Increase the distance between the equipment and receiver
    (b) Connect the equipment into an outlet on a circuit different from that to which the receiver is connected.
(2) Consult an experienced radio/TV technician for help.

CTR 21 pan-European Certification

This equipment has been approved in accordance with Council Decision 98/482/EC for pan-European single terminal connection to the public switched telephone network (PSTN). However, due to differences between the individual PSTNs provided in different countries, the approval does not, of itself, give an unconditional assurance of successful operation on every PSTN network termination point. In the event of problems, you should contact your equipment supplier in the first instance.

This device is designed to work with the notified networks in all EC member states. Nevertheless, some of the network services in invidual countries might not be supported, but they will not affect the normal data and fax applications. For example, the metering charge service in Germany. Besides you may encounter difficul of using PULSE dialing function in some of the countries, such Nordic countries. This kind of network compatibility is depende on the physical and software settings of this device. If the use are desired to use this device on those networks, they shou contact the vendor or supplier first.

Note :

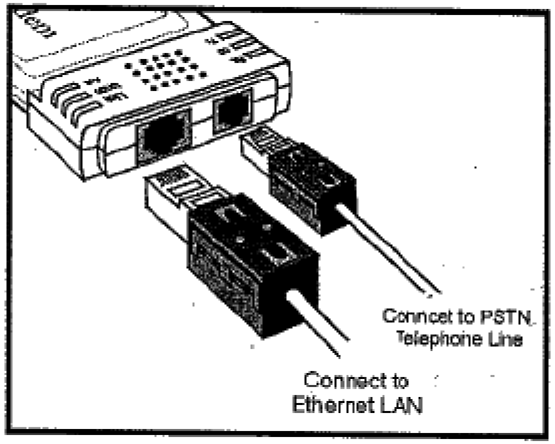If you have EMI (electromagnetic interferenc issues.Attached the Ferrite Cores on this tw cables as shows: