FCC ID:2AWCN-Q58

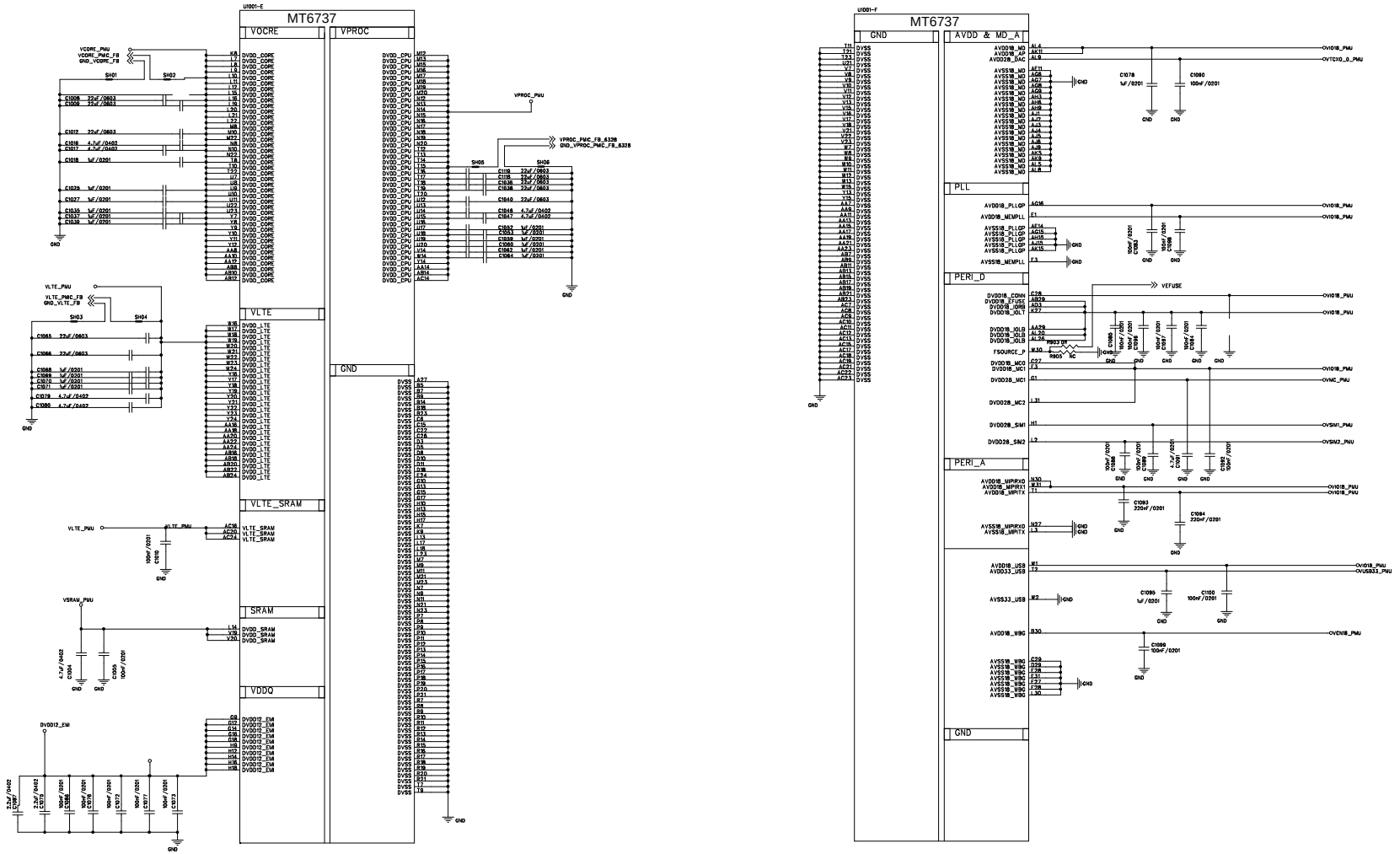

TITLE	10_BB_POWER
SIZE D	MTK Confidential
DATE: Monday, April 28, 2015	SHEET 10 OF 99

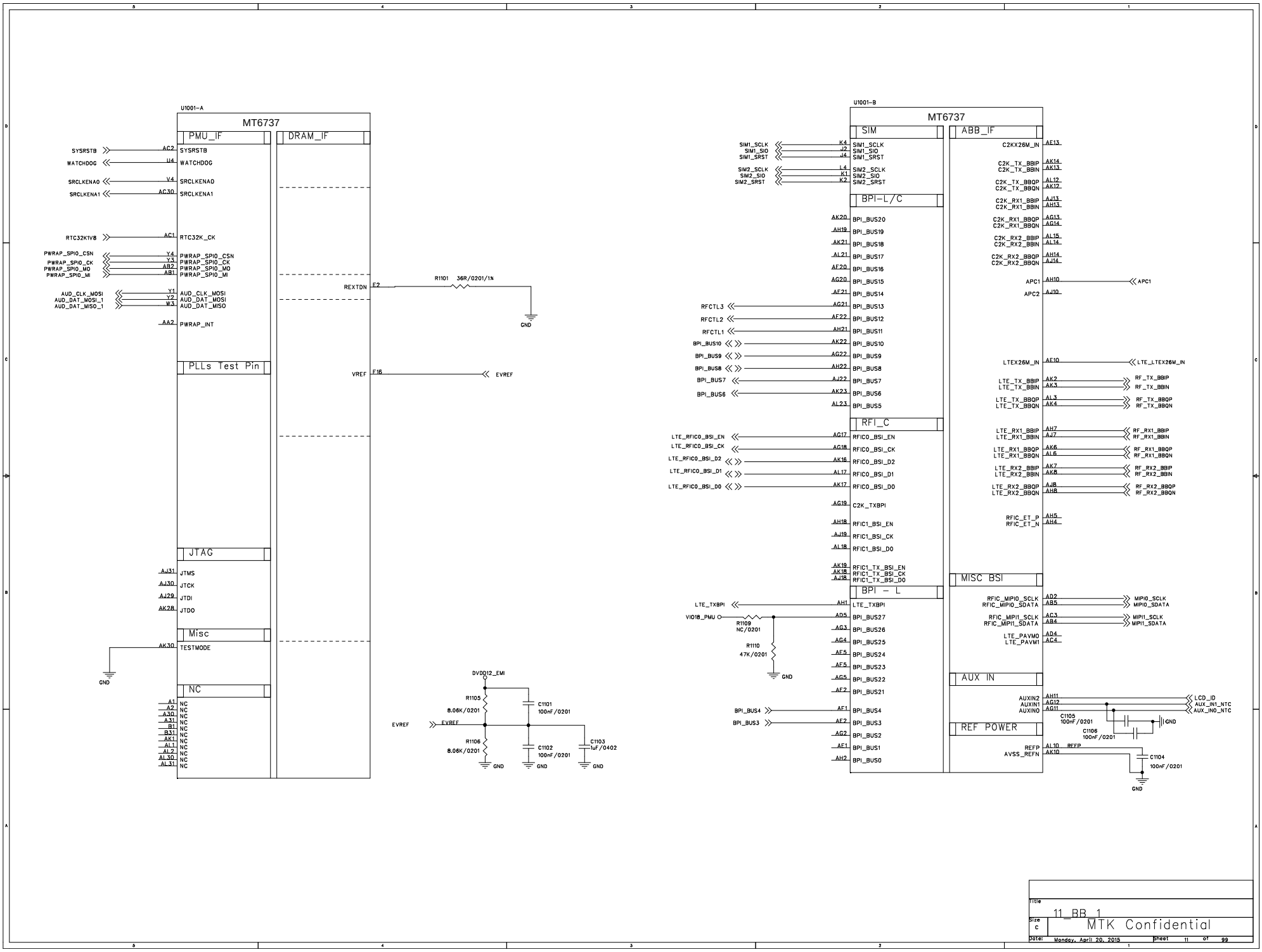

Title 11_BB_1

Size C

MTK Confidential

Date: Monday, April 20, 2015

Sheet 11 of 99

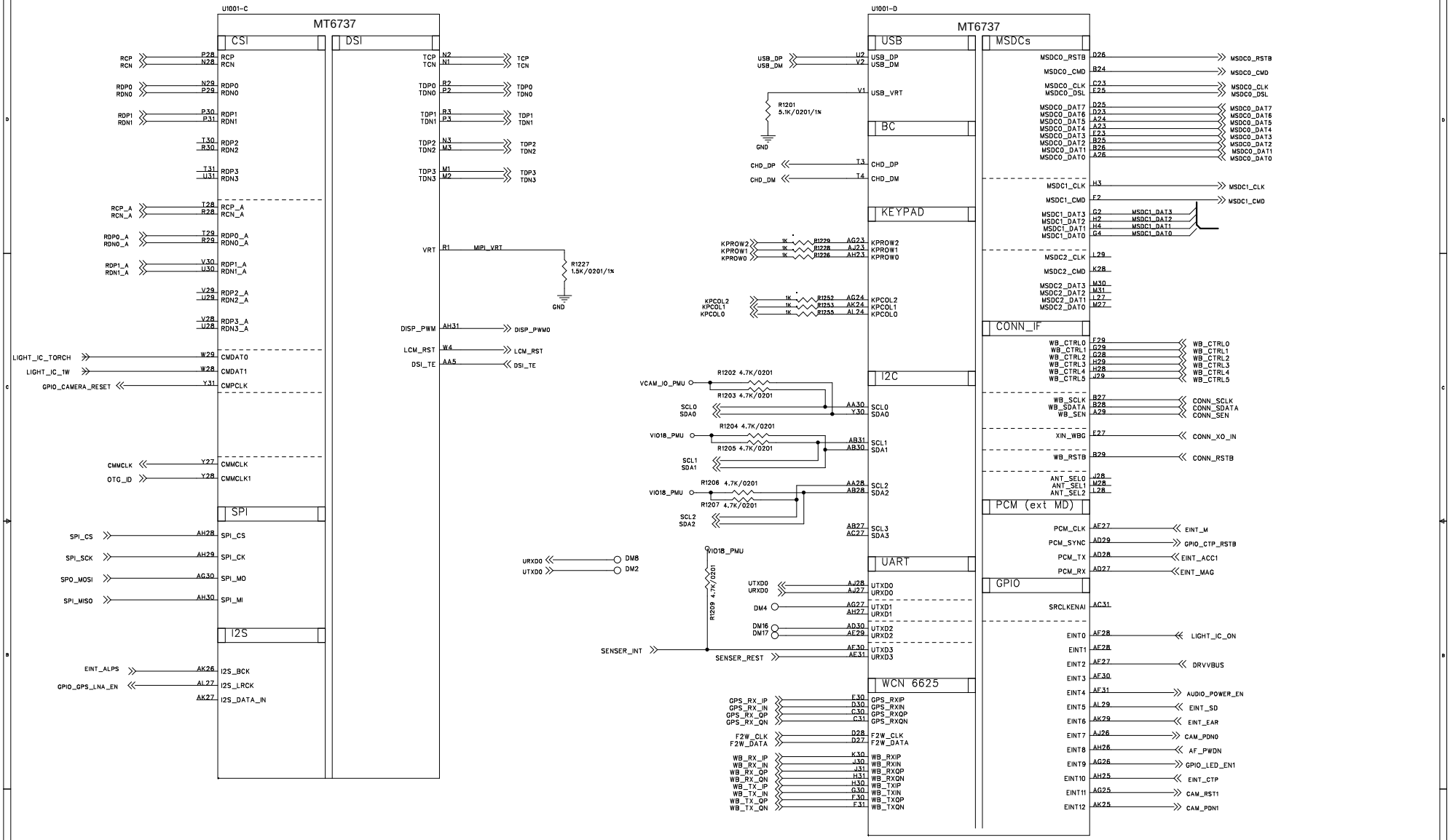

Title: 12_BB_2

Size: c

MTK Confidential

Date: Monday, April 20, 2015

Sheet 12 of 99

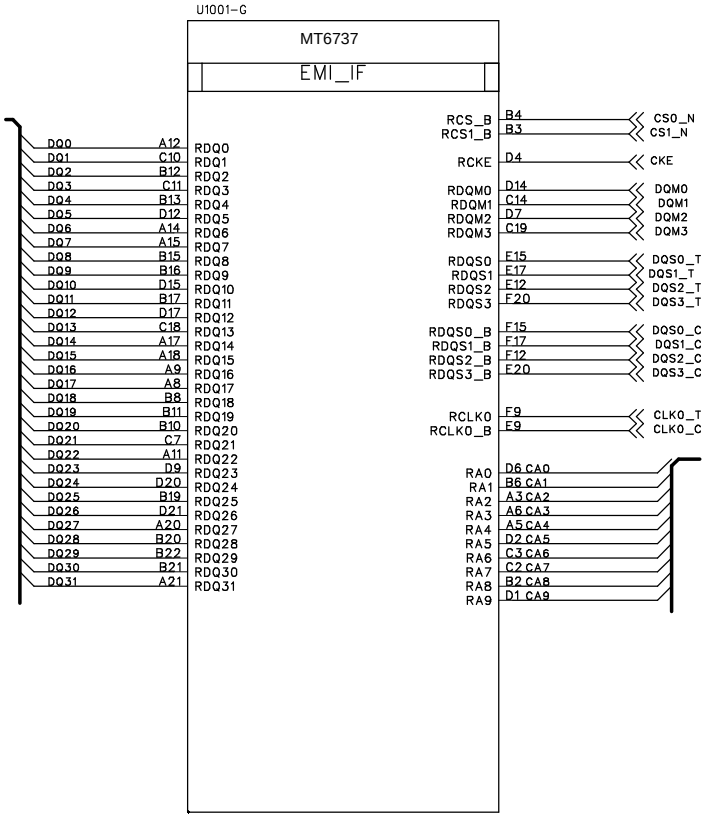

Title 13_BB_3

Size B

MTK Confidential

Date: Monday, April 20, 2015

Sheet 13 of 99

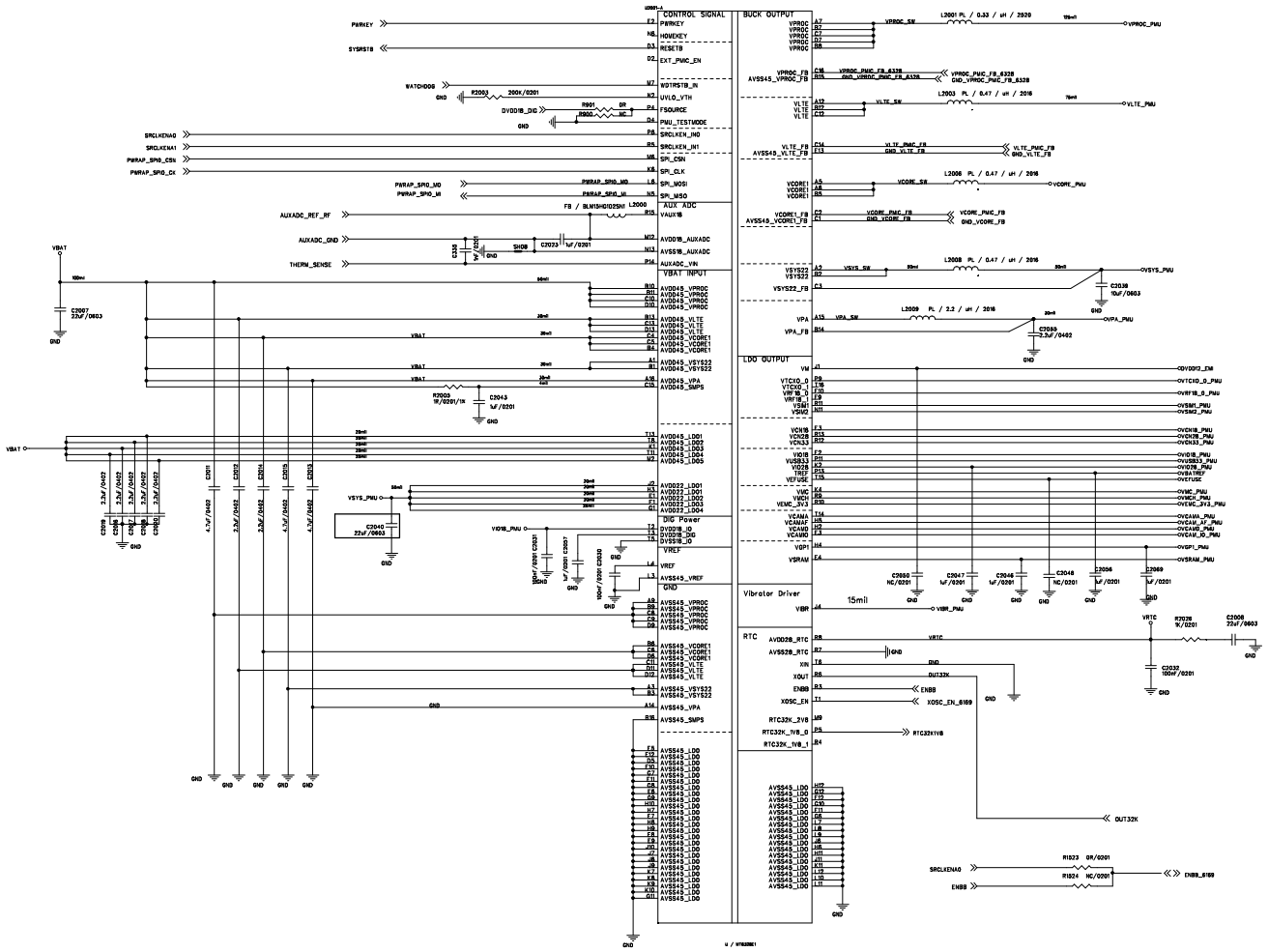

VIBRATOR

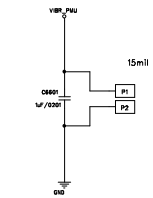

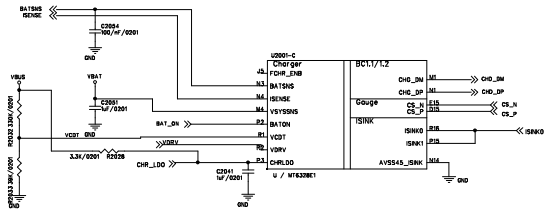

Audio

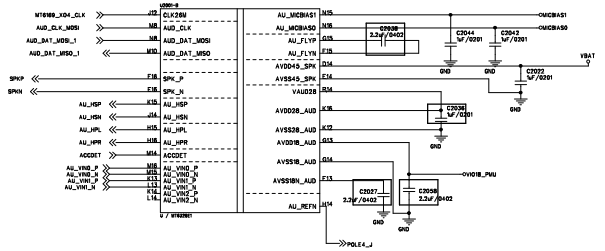

TITLE	20_POWER_MT6328
SIZE A1	MTK Confidential
DATE: Monday, April 20, 2015	SHEET 20 OF 88

BATTERY CONNECTOR

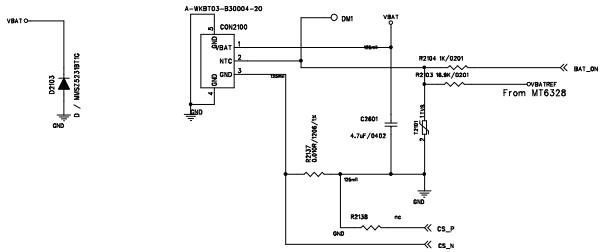

Pulse Charger

TITLE	21_POWER_TBD
SIZE D	MTK Confidential
DATE:	Monday, April 28, 2015 SHEET 21 OF 99

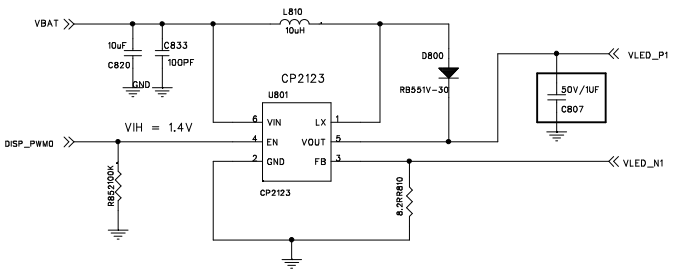

Title
23_POWER_THIRD-PARTY
Size
c
MTK Confidential
Date: Monday, April 20, 2015
Sheet 23 of 99

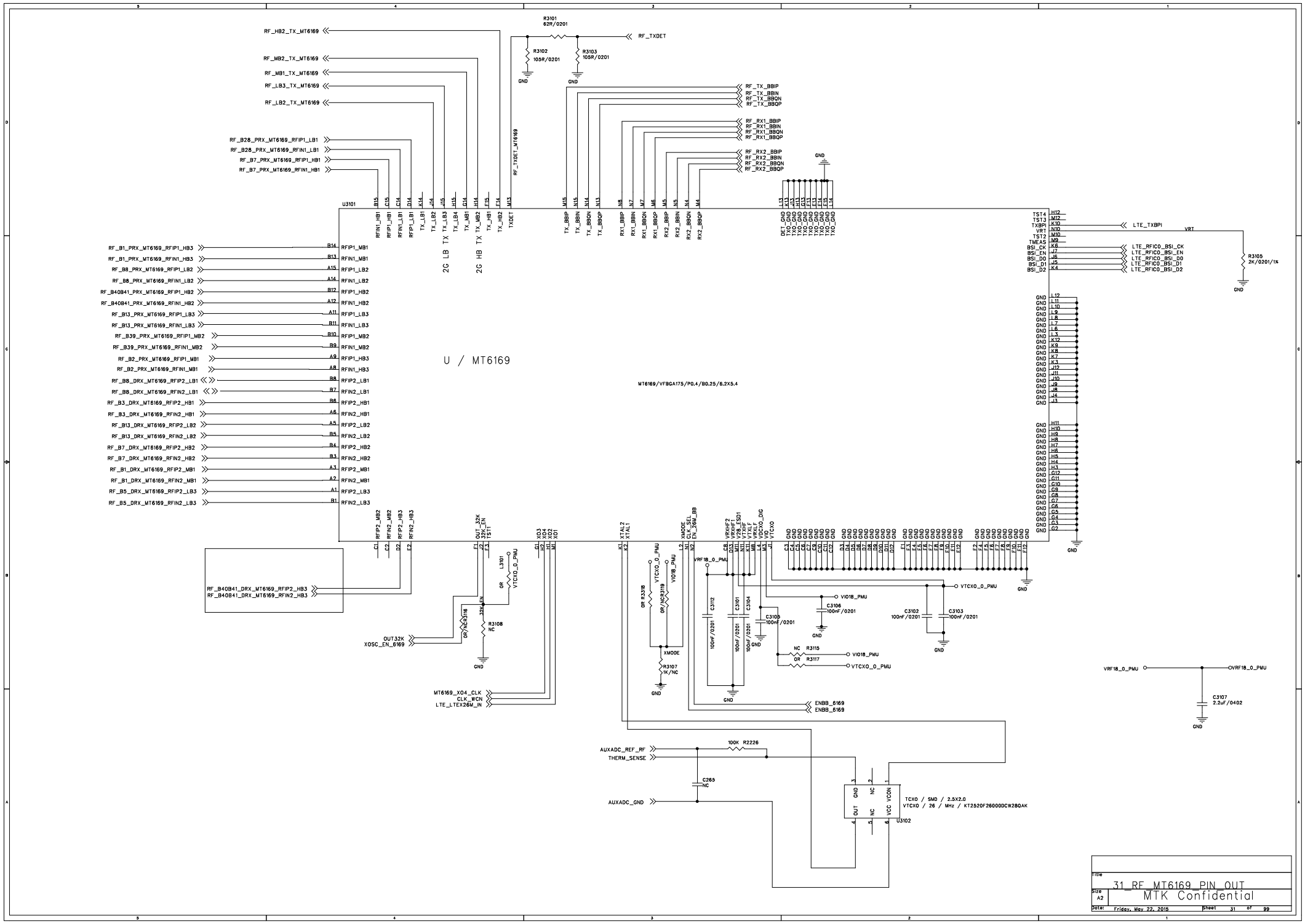
U / MT6169
MT6169/VFBGA175/P0.4/B0.25/6.2X5.4
U3101
RF_HB2_TX_MT6169
RF_MB2_TX_MT6169
RF_MB1_TX_MT6169
RF_LB3_TX_MT6169
RF_LB2_TX_MT6169
RF_B28_PRX_MT6169_RFIP1_LB1
RF_B28_PRX_MT6169_RFIN1_LB1
RF_B7_PRX_MT6169_RFIP1_HB1
RF_B7_PRX_MT6169_RFIN1_HB1
RF_B1_PRX_MT6169_RFIP1_HB3
RF_B1_PRX_MT6169_RFIN1_HB3
RF_B8_PRX_MT6169_RFIP1_LB2
RF_B8_PRX_MT6169_RFIN1_LB2
RF_B40B41_PRX_MT6169_RFIP1_HB2
RF_B40B41_PRX_MT6169_RFIN1_HB2
RF_B13_PRX_MT6169_RFIP1_LB3
RF_B13_PRX_MT6169_RFIN1_LB3
RF_B39_PRX_MT6169_RFIP1_MB2
RF_B39_PRX_MT6169_RFIN1_MB2
RF_B2_PRX_MT6169_RFIP1_MB1
RF_B2_PRX_MT6169_RFIN1_MB1
RF_B8_DRX_MT6169_RFIP2_LB1
RF_B8_DRX_MT6169_RFIN2_LB1
RF_B3_DRX_MT6169_RFIP2_HB1
RF_B3_DRX_MT6169_RFIN2_HB1
RF_B13_DRX_MT6169_RFIP2_LB2
RF_B13_DRX_MT6169_RFIN2_LB2
RF_B7_DRX_MT6169_RFIP2_HB2
RF_B7_DRX_MT6169_RFIN2_HB2
RF_B1_DRX_MT6169_RFIP2_MB1
RF_B1_DRX_MT6169_RFIN2_MB1
RF_B5_DRX_MT6169_RFIP2_LB3
RF_B5_DRX_MT6169_RFIN2_LB3
RF_B40B41_DRX_MT6169_RFIP2_HB3
RF_B40B41_DRX_MT6169_RFIN2_HB3
OUT32K
XOSC_EN_6169
MT6169_XO4_CLK
CLK_WCN
LTE_LTEX26M_IN
R3101 62R/0201
R3102 105R/0201
R3103 105R/0201
RF_TXDET
RF_TX_BBIP
RF_TX_BBIN
RF_TX_BBQN
RF_TX_BBQP
RF_RX1_BBIP
RF_RX1_BBIN
RF_RX1_BBQN
RF_RX1_BBQP
RF_RX2_BBIP
RF_RX2_BBIN
RF_RX2_BBQN
RF_RX2_BBQP
LTE_TXBPI
VRT
R3105 2K/0201/1%
LTE_RFICO_BSI_CK
LTE_RFICO_BSI_EN
LTE_RFICO_BSI_D0
LTE_RFICO_BSI_D1
LTE_RFICO_BSI_D2
L3101
VTCXO_0_PMU
R3108 NC
R3318
R3319
R3107 1K/NC
VIO18_PMU
VRF18_0_PMU
C3112 100nF/0201
C3101 100nF/0201
C3104 100nF/0201
C3105 100nF/0201
C3106 100nF/0201
C3102 100nF/0201
C3103 100nF/0201
R3115 NC
R3117 0R
ENBB_6169
AUXADC_REF_RF
THERM_SENSE
AUXADC_GND
R2226 100K
C265 NC
U3102
TCXO / SMD / 2.5X2.0
VTCXO / 26 / MHz / KT2520F26000DCW28QAK
OVRF18_0_PMU
C3107 2.2uF/0402
GND
Title
31_RF_MT6169_PIN_OUT
Size A2
MTK Confidential
Date: Friday, May 22, 2015
Sheet 31 of 99

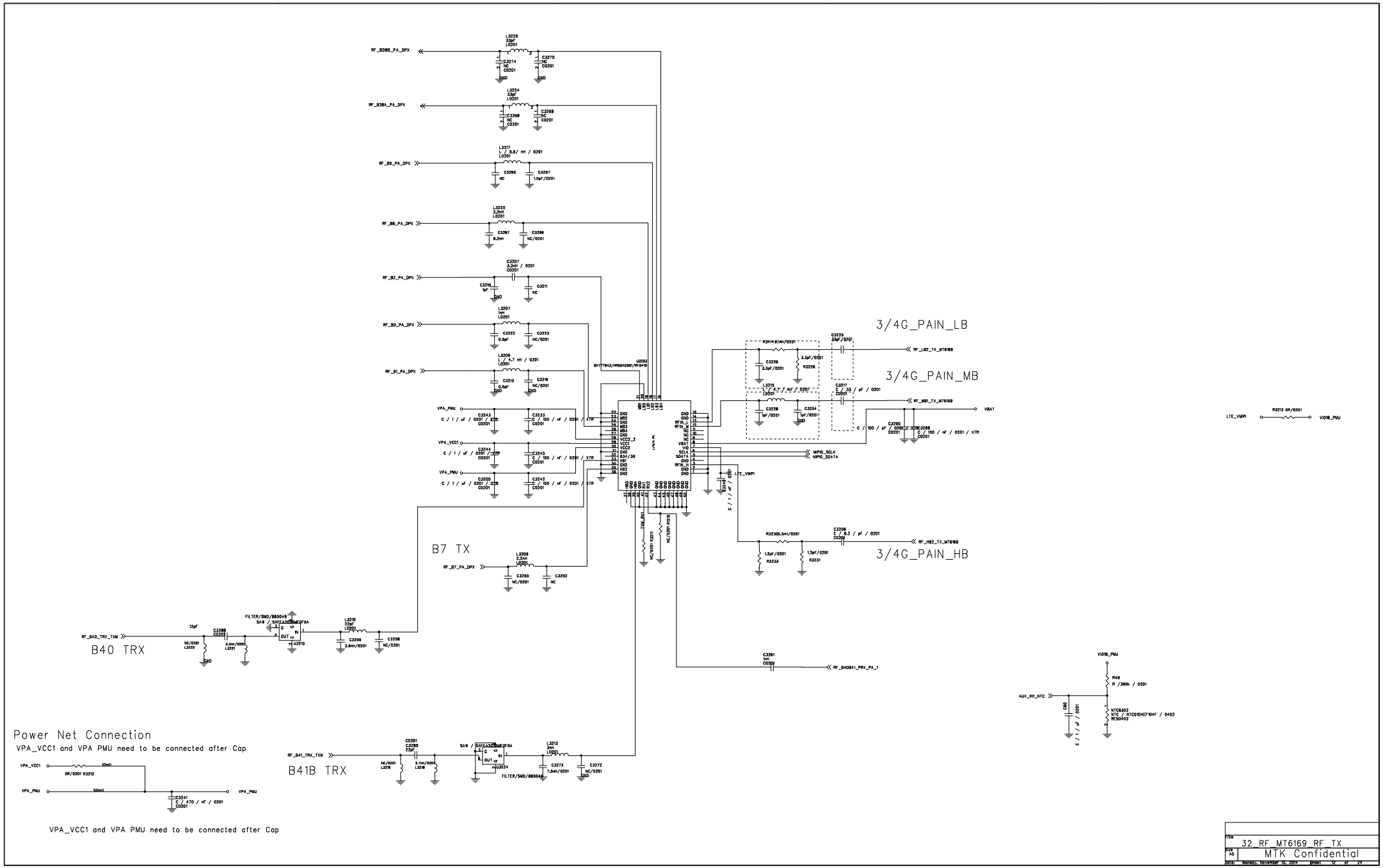
3/4G_PAIN_LB
3/4G_PAIN_MB
3/4G_PAIN_HB
B7 TX
B40 TRX
B41B TRX
Power Net Connection
VPA_VCC1 and VPA PMU need to be connected after Cap
VPA_VCC1 and VPA PMU need to be connected after Cap
RF_B28B_PA_DPX
RF_B28A_PA_DPX
RF_B5_PA_DPX
RF_B8_PA_DPX
RF_B2_PA_DPX
RF_B3_PA_DPX
RF_B1_PA_DPX
RF_B7_PA_DPX
RF_B40_TRX_TXM
RF_B41_TRX_TXM
RF_LB2_TX_MT6169
RF_MB1_TX_MT6169
RF_HB2_TX_MT6169
RF_B40B41_PRX_PA_1
VBAT
MIPI0_SCLK
MIPI0_SDATA
LTE_VMPI
VIO18_PMU
AUX_INT_NTC
VPA_PMU
VPA_VCC1
SKY77843/HRSMA001/HF3419
FILTER/SMD/885049
SAW / SAFEA2G58MEF0A
TITLE 32_RF_MT6169_RF_TX
SIZE A0
MTK Confidential
DATE: Monday, November 10, 2014 SHEET 12 OF 24

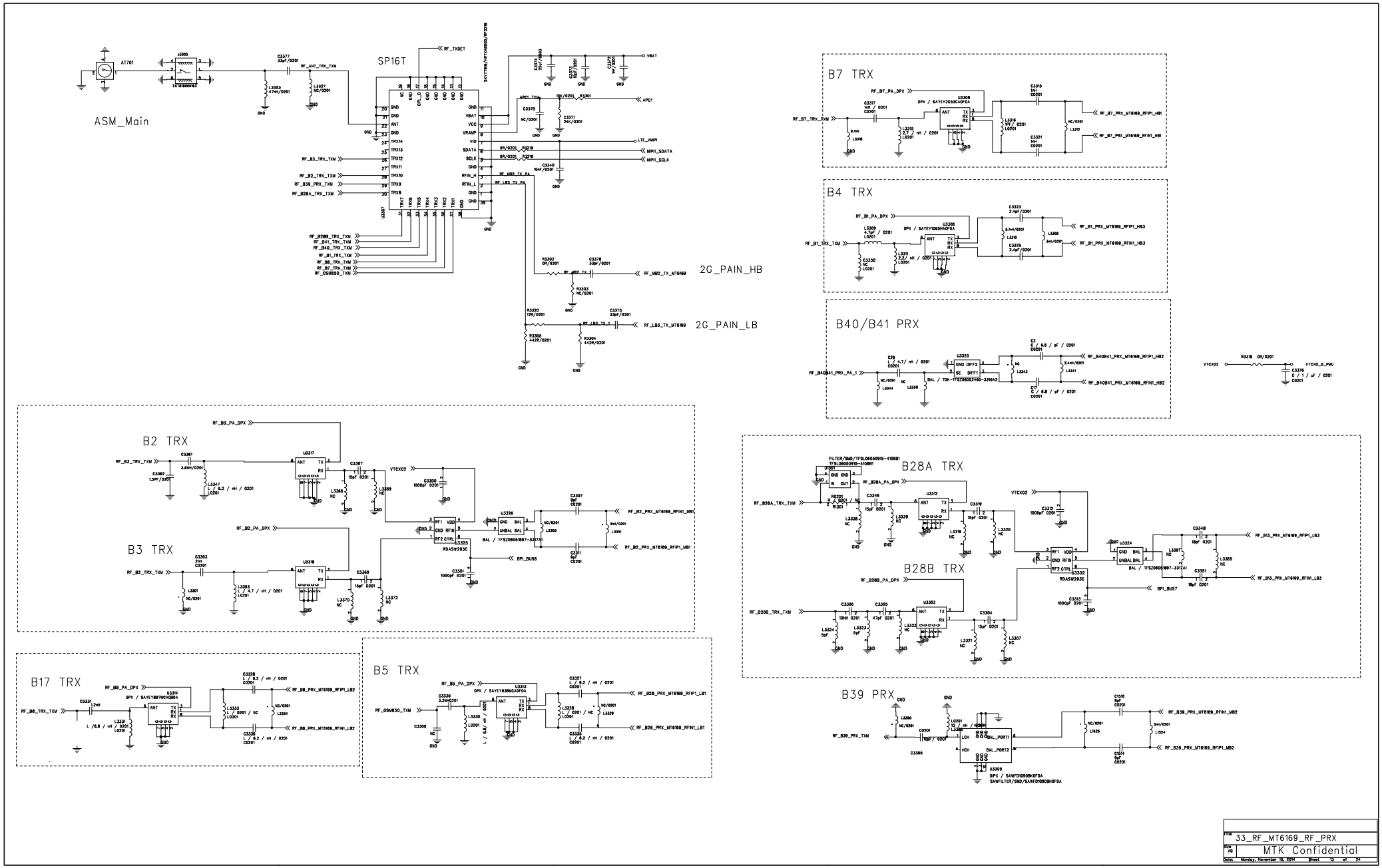
ASM_Main
SP16T
2G_PAIN_HB
2G_PAIN_LB
B7 TRX
B4 TRX
B40/B41 PRX
B2 TRX
B3 TRX
B28A TRX
B28B TRX
B17 TRX
B5 TRX
B39 PRX
33_RF_MT6169_RF_PRX
MTK Confidential

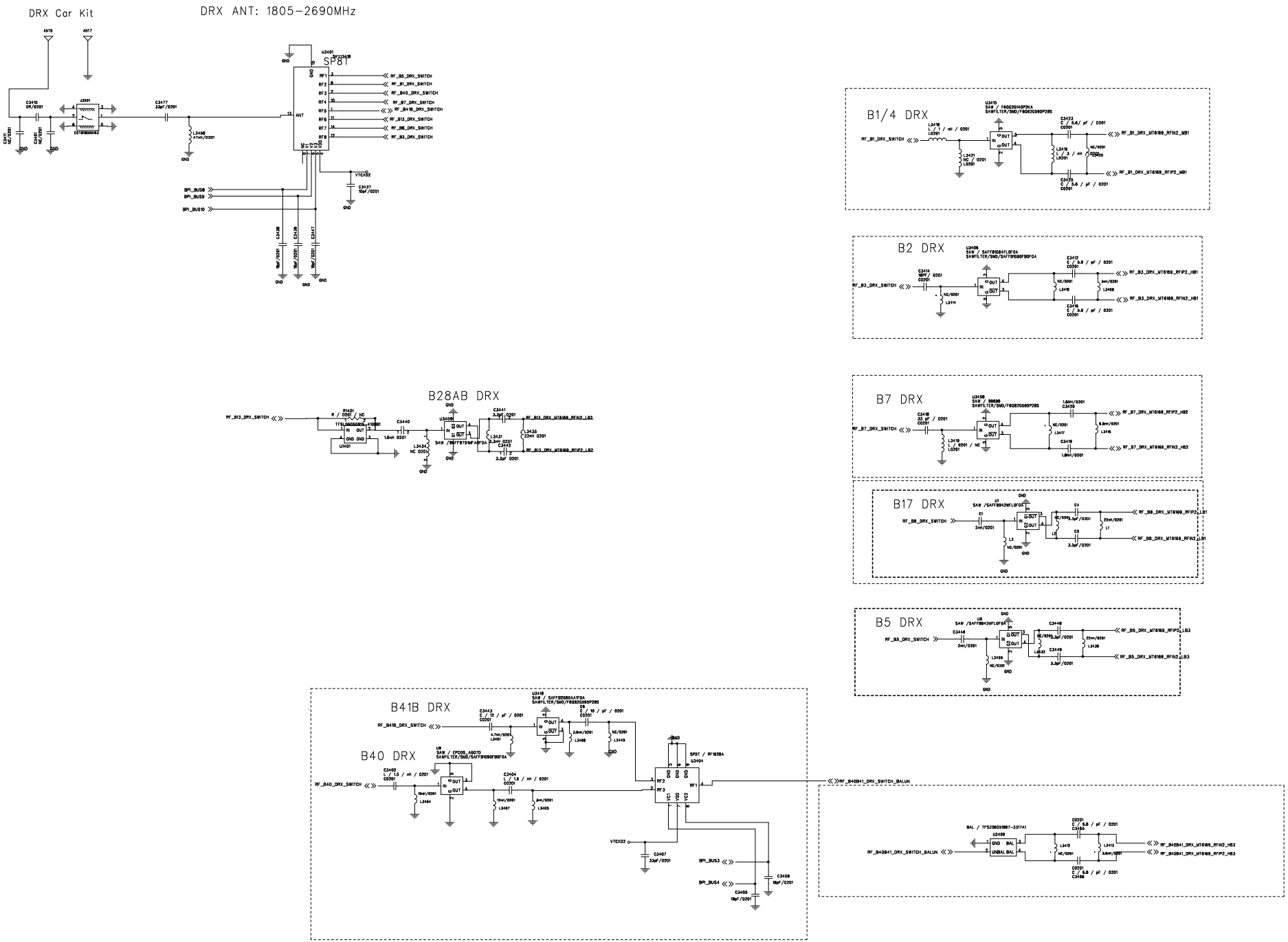

TITLE	34_RF_MT6169_RF_DRX
SIZE A1	MTK Confidential
DATE: Friday, May 22, 2015	SHEET 34 OF 99

Connect to AP	
DQ[0..31]	DQ[0..31]
CA[0..9]	CA[0..9]
CS0_N	CS0_N
CS1_N	CS1_N
CKE	CKE
DQM0	DQM0
DQM1	DQM1
DQM2	DQM2
DQM3	DQM3
DQS0_C	DQS0_C
DQS1_C	DQS1_C
DQS2_C	DQS2_C
DQS3_C	DQS3_C
DQS0_T	DQS0_T
DQS1_T	DQS1_T
DQS2_T	DQS2_T
DQS3_T	DQS3_T
CLK0_T	CLK0_T
CLK0_C	CLK0_C
VREF_CA	VREF_CA
VREF_DQ	VREF_DQ
MSDC0_RSTB	MSDC0_RSTB
MSDC0_CMD	MSDC0_CMD
MSDC0_CLK	MSDC0_CLK
MSDC0_DSL	MSDC0_DSL
MSDC0_DAT0	MSDC0_DAT0
MSDC0_DAT1	MSDC0_DAT1
MSDC0_DAT2	MSDC0_DAT2
MSDC0_DAT3	MSDC0_DAT3
MSDC0_DAT4	MSDC0_DAT4
MSDC0_DAT5	MSDC0_DAT5
MSDC0_DAT6	MSDC0_DAT6
MSDC0_DAT7	MSDC0_DAT7

Power I/F	
VIO18_PMU	VIO18_PMU
VEMC_3V3_PMU	VEMC_3V3_PMU
DVDD12_EMI	DVDD12_EMI

eMMC+LPDDR3

221 Ball, 0.5mm pitch

8GB eMMC + 8Gb LPDDR3
Hynix/H9TQ64A8GTMCUR-KUM

VDD1=1.8V
VDD2=1.20V
VDDCA=1.2V
VDDQ= 1.20V

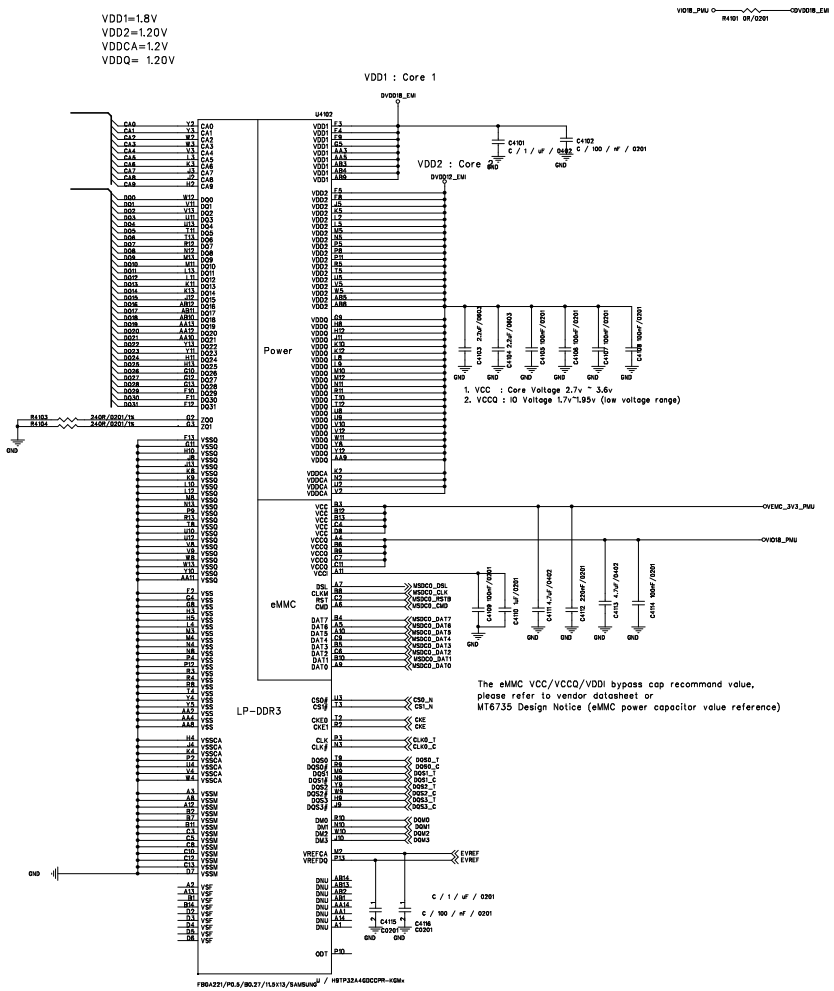

TITLE	41_Memory_eMMC_LPDDR2
SIZE D	MTK Confidential
DATE:	Monday, April 20, 2015
SHEET	41 OF 99

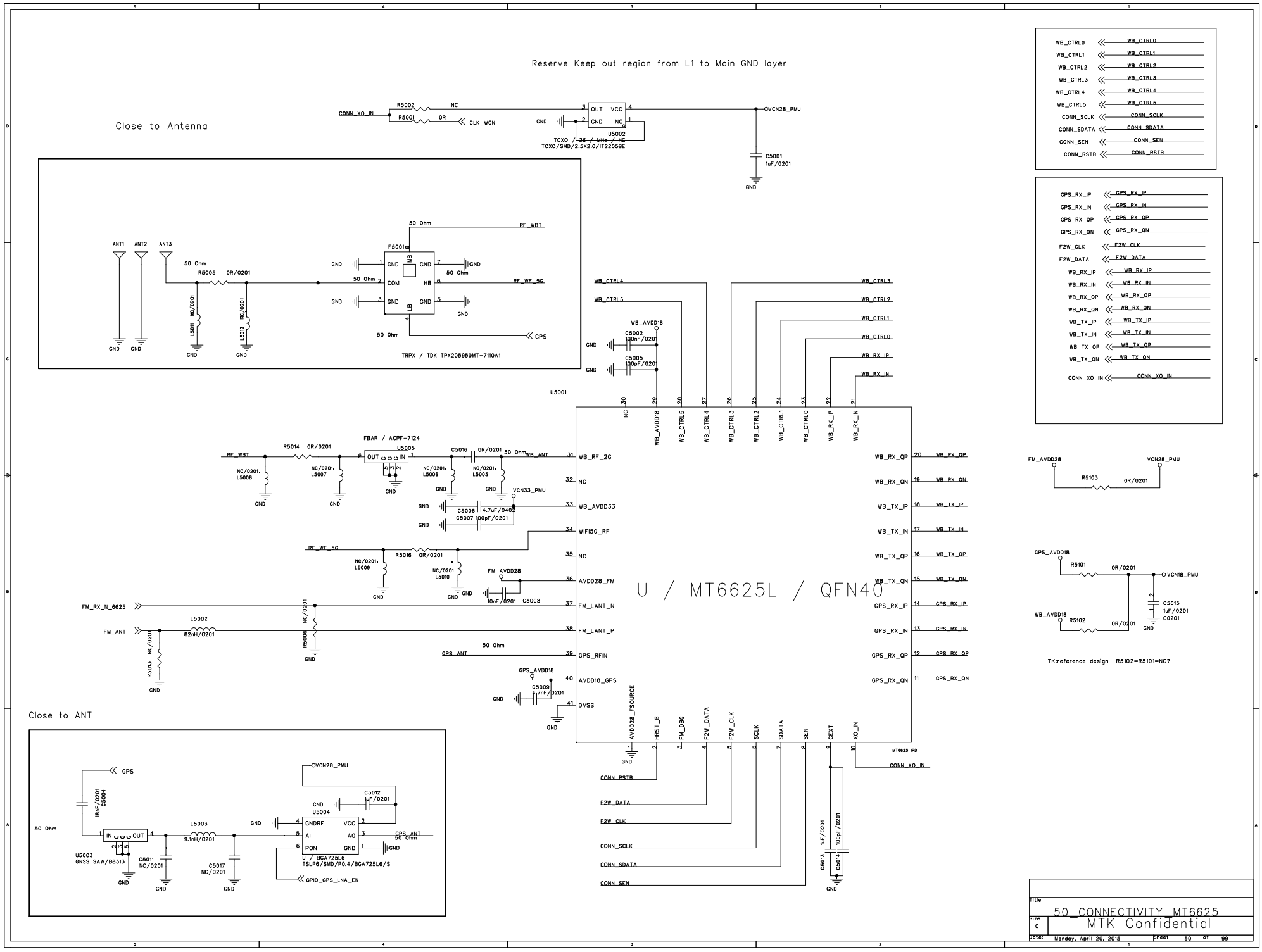
Reserve Keep out region from L1 to Main GND layer
Close to Antenna
Close to ANT
U / MT6625L / QFN40
U5001
U5002
TCXO / 26 / MHz / NC
TCXO/SMD/2.5X2.0/IT2205BE
TRPX / TDK TPX205950MT-7110A1
FBAR / ACPF-7124
U5003
GNSS SAW/B8313
U / BGA725L6
TSLP6/SMD/P0.4/BGA725L6/S
TK:reference design R5102=R5101=NC?
WB_CTRL0
WB_CTRL1
WB_CTRL2
WB_CTRL3
WB_CTRL4
WB_CTRL5
CONN_SCLK
CONN_SDATA
CONN_SEN
CONN_RSTB
GPS_RX_IP
GPS_RX_IN
GPS_RX_QP
GPS_RX_QN
F2W_CLK
F2W_DATA
WB_RX_IP
WB_RX_IN
WB_RX_QP
WB_RX_QN
WB_TX_IP
WB_TX_IN
WB_TX_QP
WB_TX_QN
CONN_XO_IN
VCN28_PMU
VCN33_PMU
VCN18_PMU
FM_AVDD28
GPS_AVDD18
WB_AVDD18
RF_WBT
RF_WF_5G
WB_ANT
FM_RX_N_6625
FM_ANT
GPS_ANT
GPS
GPIO_GPS_LNA_EN
Title
50_CONNECTIVITY_MT6625
Size
c
MTK Confidential
Date:
Monday, April 20, 2015
Sheet 50 of 99

Earphone Audio

Receiver

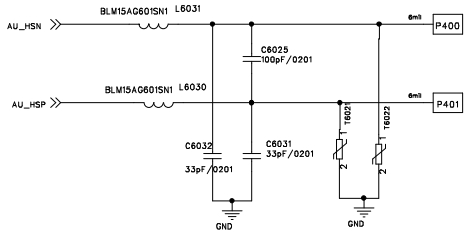

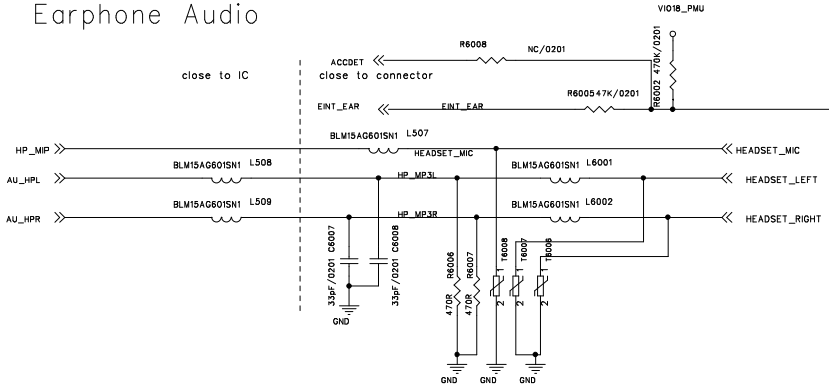

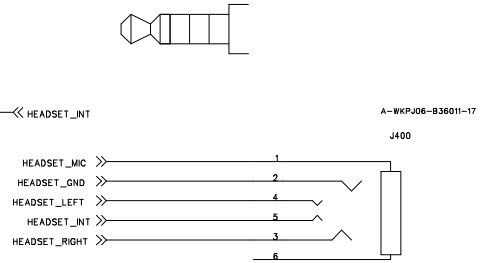

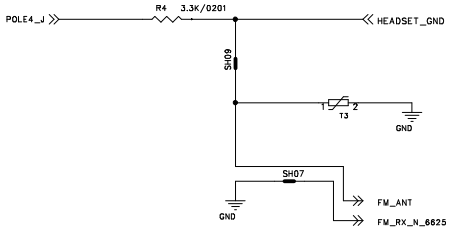

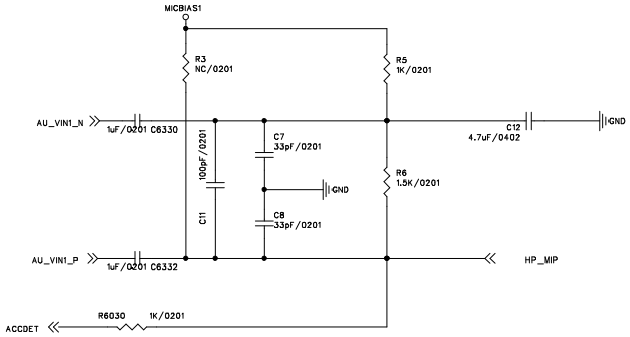

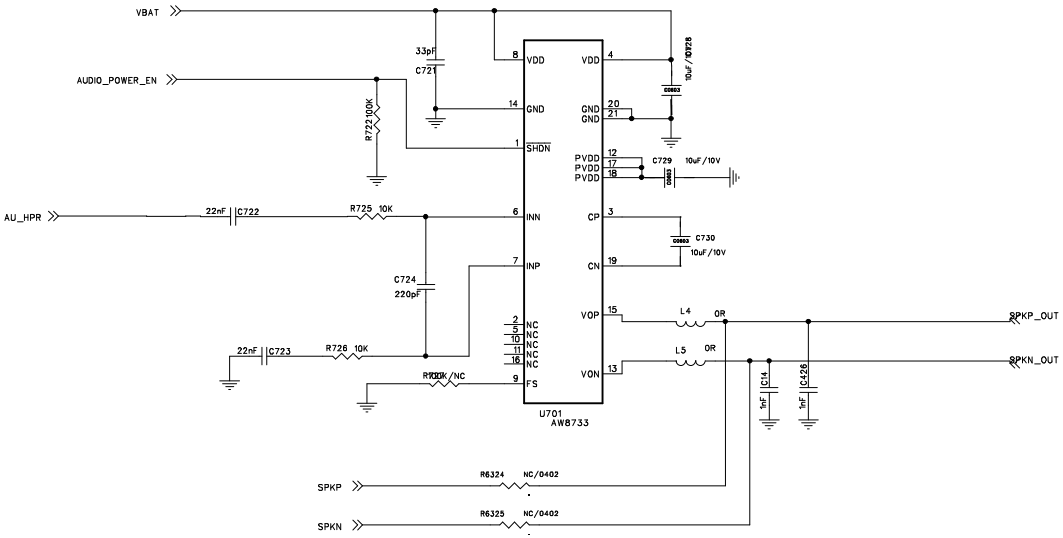

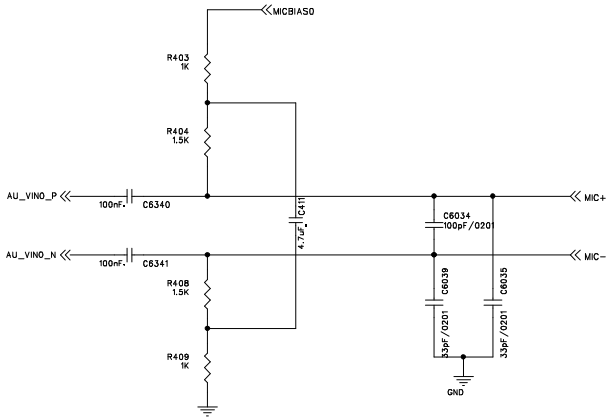

Title	60_PERI_AUDIO_IO
Size c	MTK Confidential
Date: Monday, April 20, 2015	Sheet 60 of 99

CTP Connector

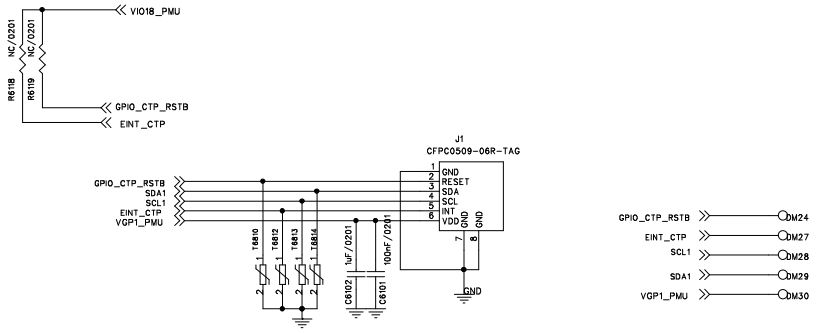

Main LCM

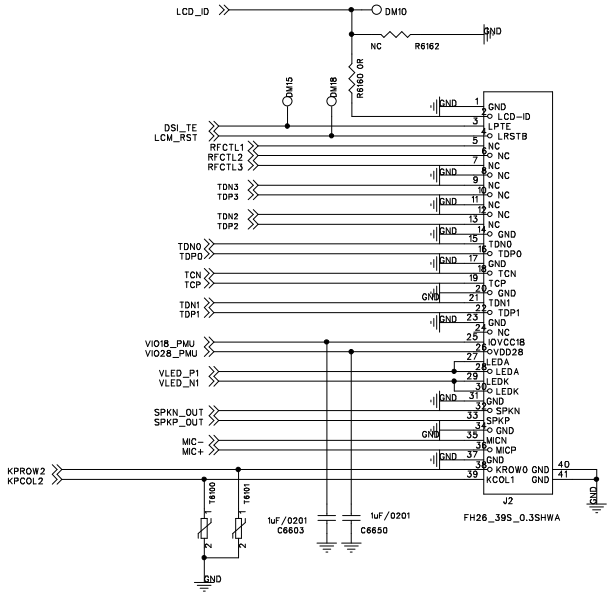

Title	61_PERI_LCD_CTP
Size C	MTK Confidential
Date: Monday, April 20, 2015	Sheet 61 of 99

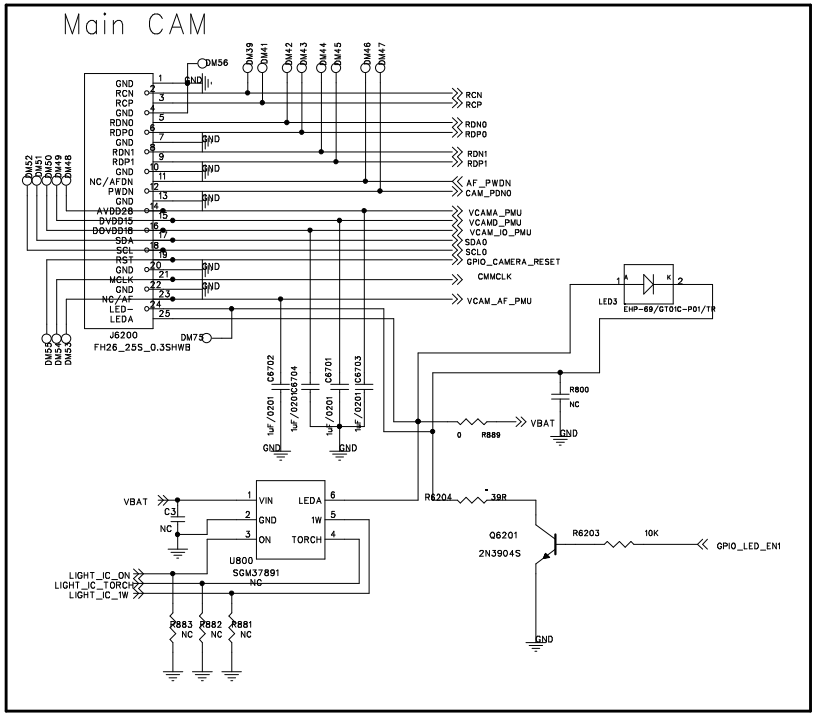

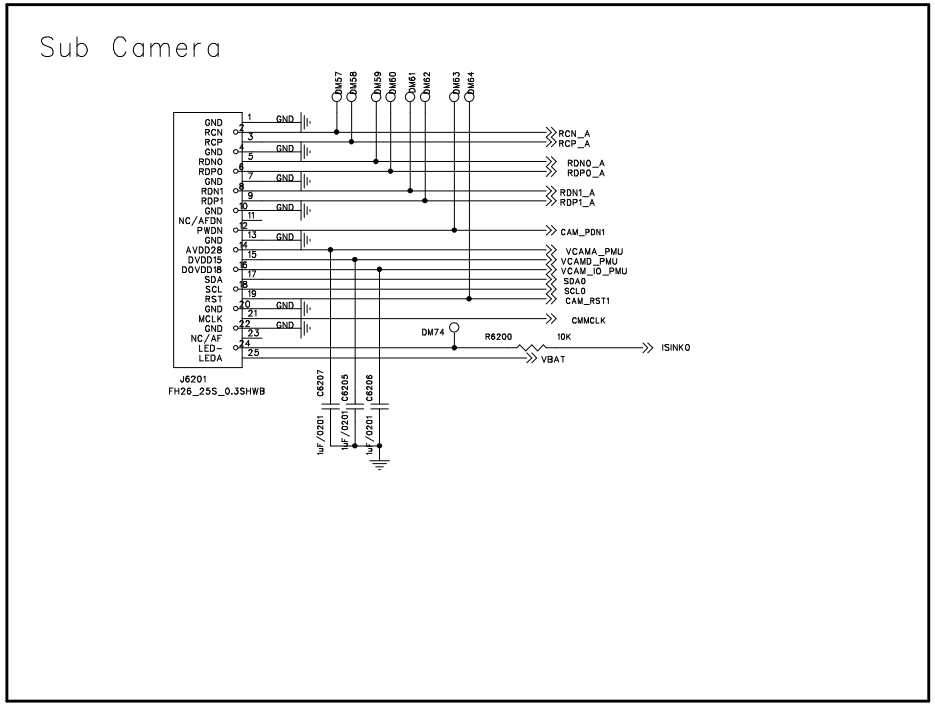

Schematic design notice of "62_PERI_CAMERA" page.

Note 62-1: If your project needs PIP function, please refer to MT6735 design notice for the connection of MCLK / I2C / AVDD & DVDD

Title	62_PERI_CAMERA
Size C	MTK Confidential
Date: Monday, April 20, 2015	Sheet 62 of 99

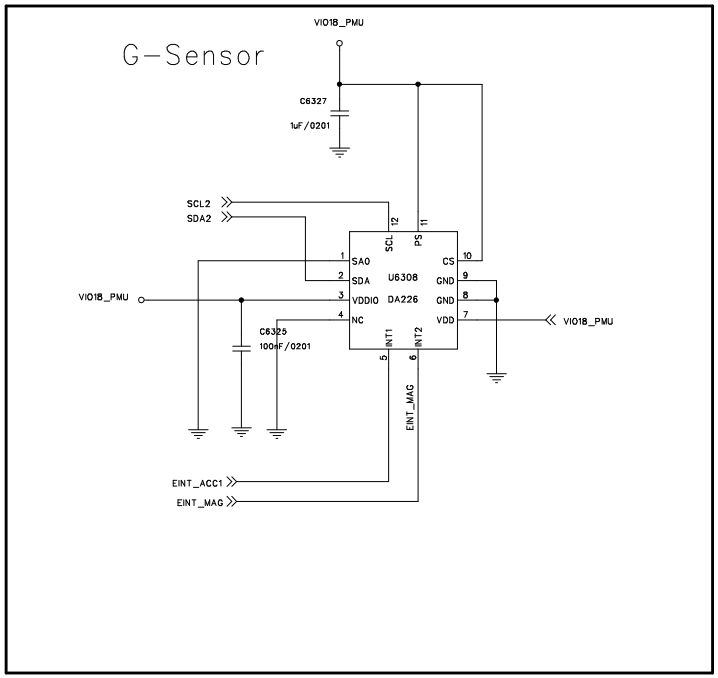

Gyro Sensor

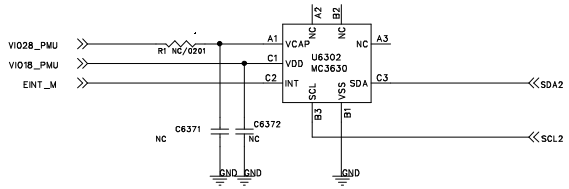

RGB & PS Sensor

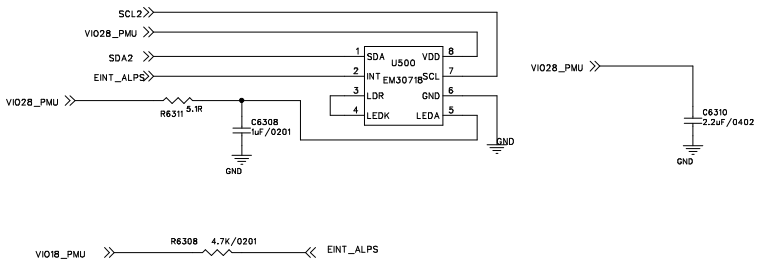

Thermistor / To sense board level temperature

Title	63_PERI_SENSORS
Size C	MTK Confidential
Date: Monday, April 20, 2015	Sheet 63 of 99

USB HS IF

If mini-A connector insert => CID < 0V => Low
If mini-B connector insert => CID > 1.2V => High

IDPULLUP pin is replaced by 1.2V power source.

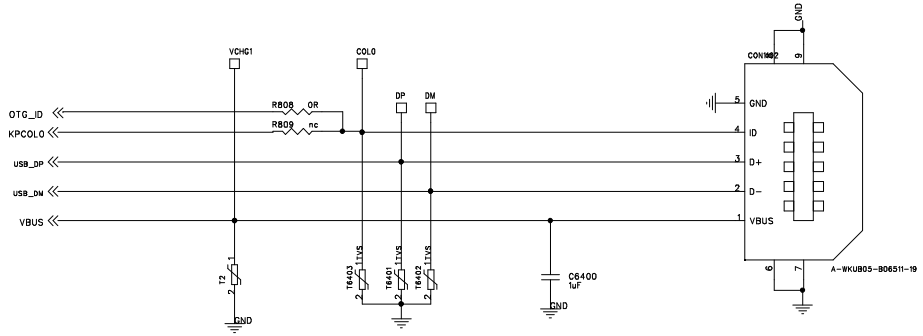

OTG POWER

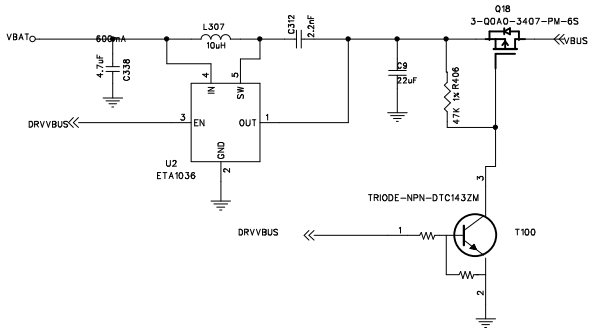

Title	64_PERI_USB
Size c	MTK Confidential
Date: Monday, April 20, 2015	Sheet 64 of 99

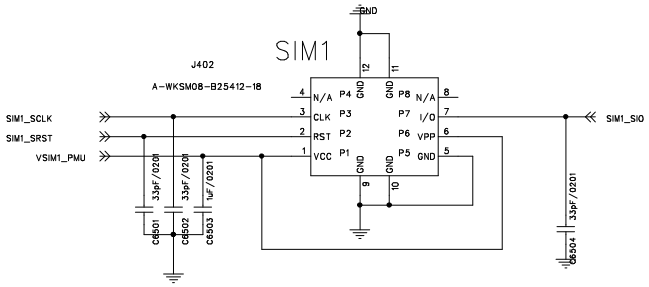

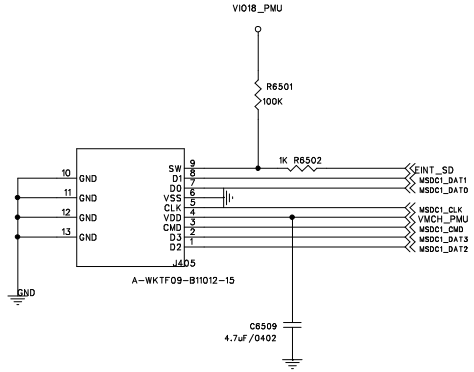

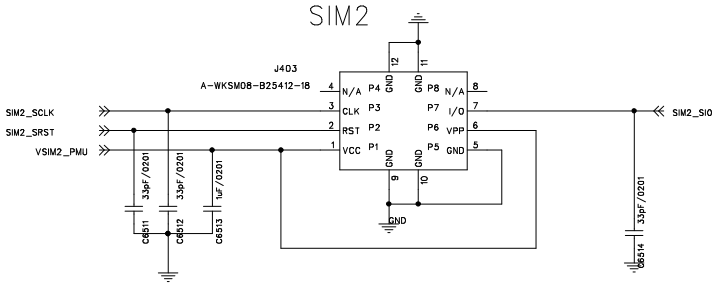

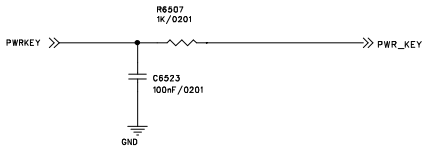

Title	65_PERI_Dual_SIM_KEYPAD
Size c	MTK Confidential
Date: Monday, April 20, 2015	Sheet 65 of 99

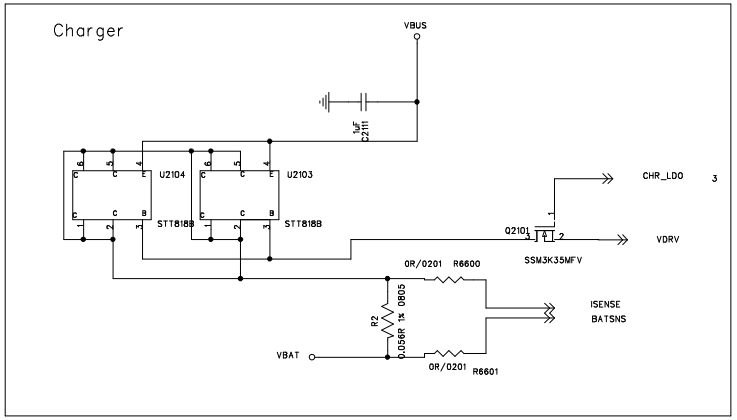

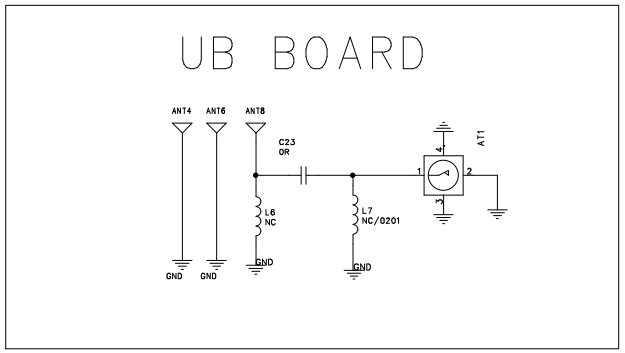

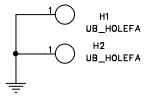

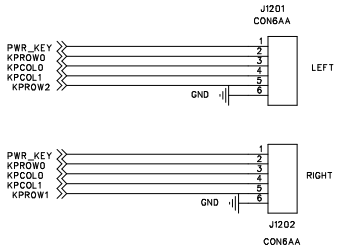

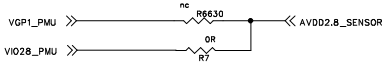

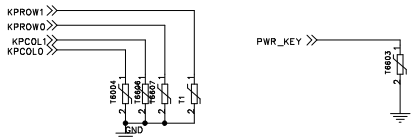

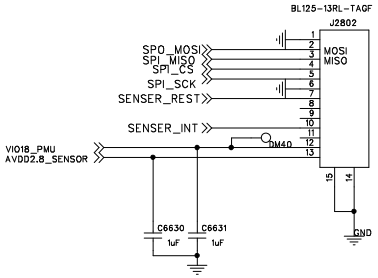

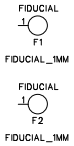

Title	90_DEBUG_IO
Size C	MTK Confidential
Date: Monday, April 20, 2015	Sheet 90 of 99