12. Marking location and layout

Marking Location

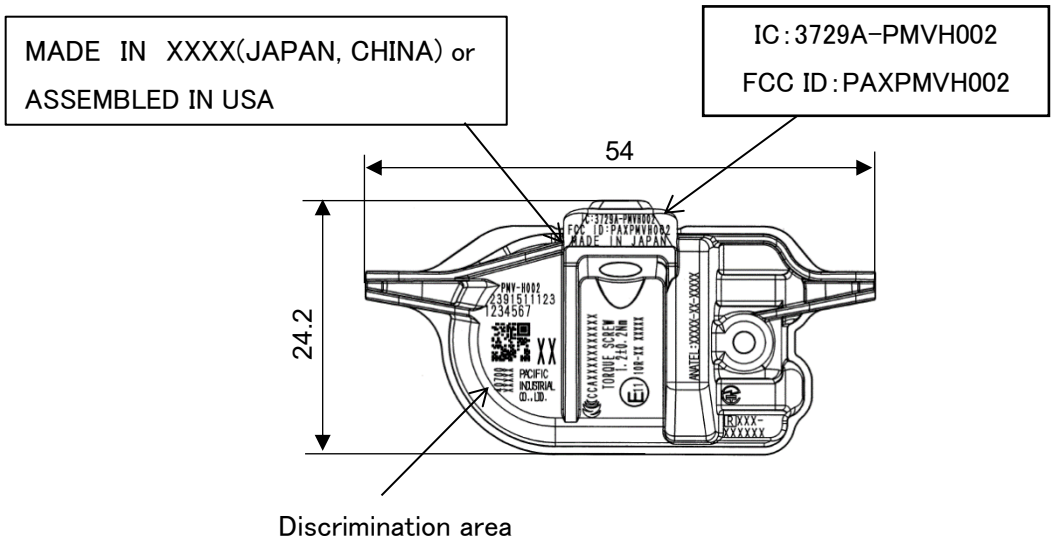

NOTE

Compliance statement of marking will not be changed.

Marking layout and size may be changed.

Mark with a laser.

Fig. 15

CONFIDENTIAL & PIC PROPRIETARY