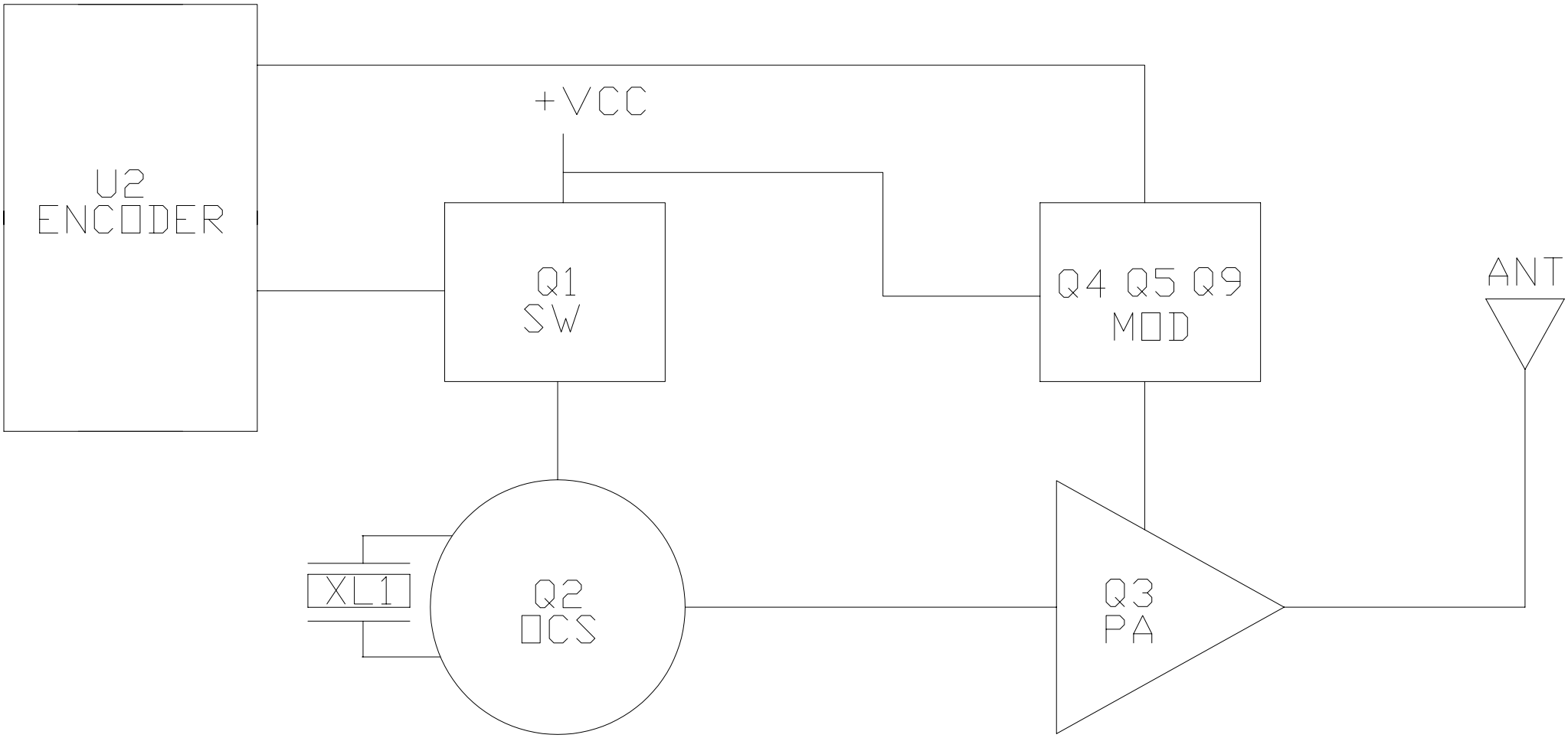5800TM-1 BLOCK DIAGRAM