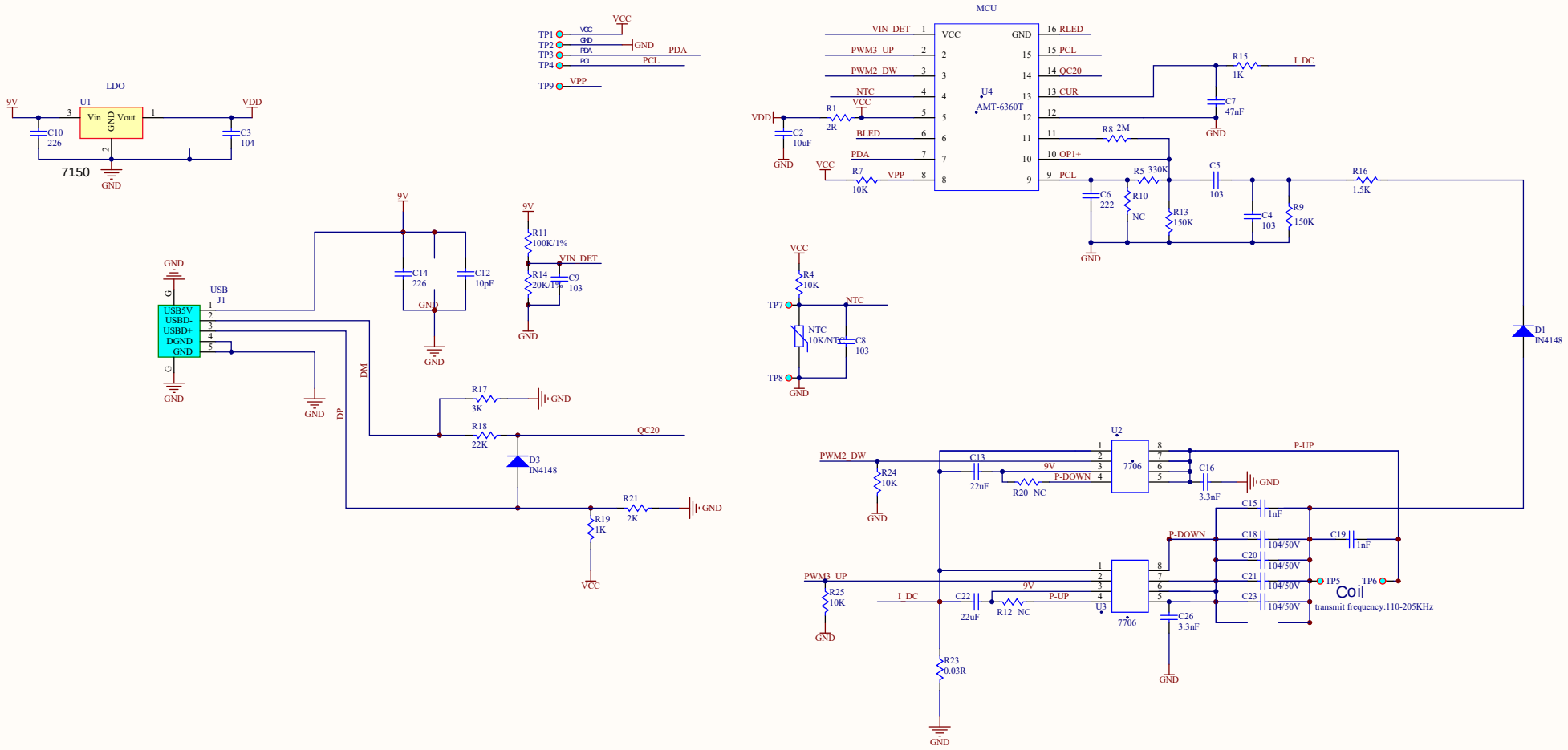


| Title | | |
|---|---|---|
| Size A4 | Number | Revision |
| Date: 2021/9/22 | | Sheet of |
| File: F:\AMT\..\A1423-HTN10-V1.0.SchDoc | | Drawn By: |