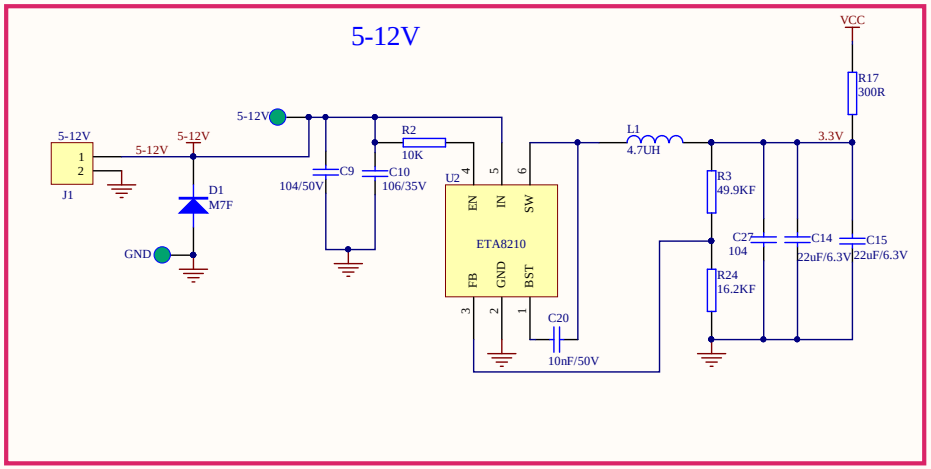
5-12V
J1
D1
M7F
C9
104/50V
C10
106/35V
R2
10K
U2
ETA8210
EN
IN
SW
FB
GND
BST
C20
10nF/50V
L1
4.7UH
R3
49.9KF
R24
16.2KF
C27
104
C14
22uF/6.3V
C15
22uF/6.3V
R17
300R
VCC
3.3V

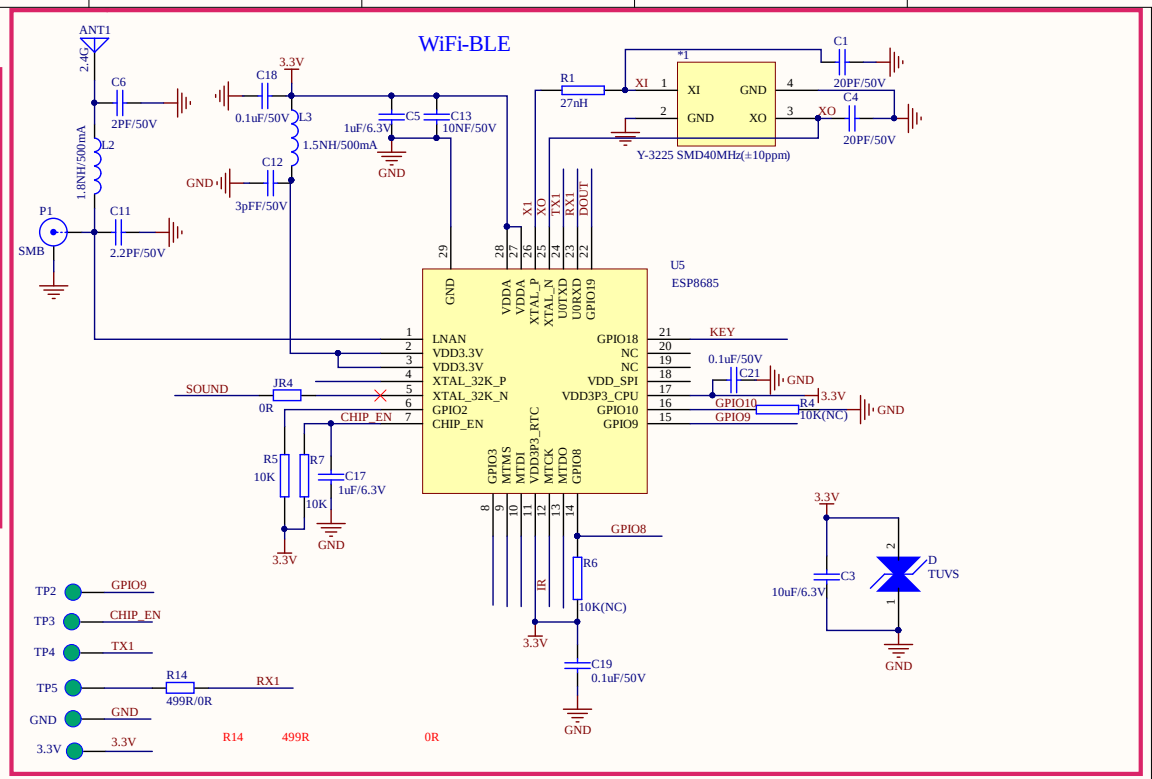
WiFi-BLE
ANT1
2.4G
C6
2PF/50V
L2
1.8NH/500mA
P1
SMB
C11
2.2PF/50V
C18
0.1uF/50V
L3
1.5NH/500mA
C12
3pFF/50V
C5
1uF/6.3V
C13
10NF/50V
R1
27nH
C1
20PF/50V
C4
20PF/50V
Y-3225 SMD40MHz(±10ppm)
U5
ESP8685
LNAN
VDD3.3V
VDD3.3V
XTAL_32K_P
XTAL_32K_N
GPIO2
CHIP_EN
GPIO18
NC
NC
VDD_SPI
VDD3P3_CPU
GPIO10
GPIO9
GPIO3
MTMS
MTDI
VDD3P3_RTC
MTCK
MTDO
GPIO8
GND
VDDA
VDDA
XTAL_P
XTAL_N
U0TXD
U0RXD
GPIO19
KEY
SOUND
JR4
0R
CHIP_EN
R5
10K
R7
10K
C17
1uF/6.3V
C21
0.1uF/50V
R4
10K(NC)
R6
10K(NC)
C19
0.1uF/50V
C3
10uF/6.3V
D
TUVS
TP2
GPIO9
TP3
CHIP_EN
TP4
TX1
TP5
R14
499R/0R
RX1
GND
3.3V
R14
499R
0R

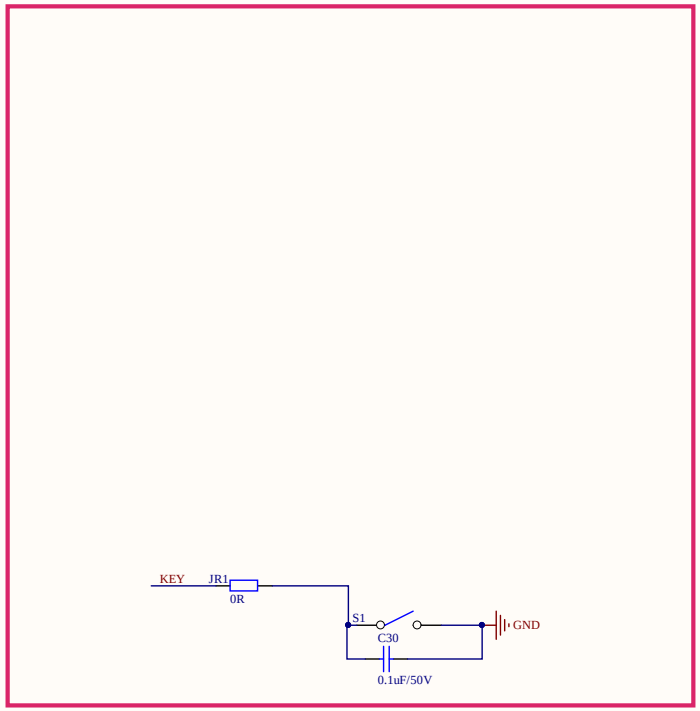
KEY
JR1
0R
S1
C30
0.1uF/50V
GND

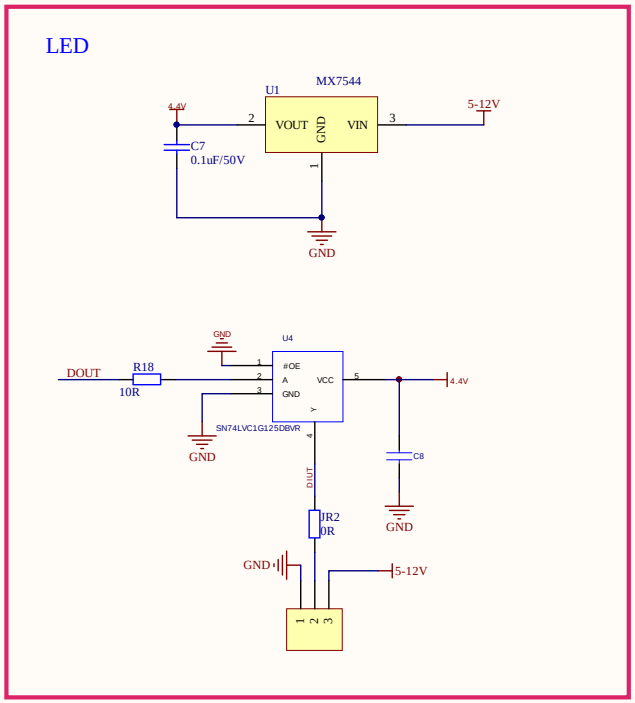
LED
U1
MX7544
VOUT
GND
VIN
4.4V
C7
0.1uF/50V
5-12V
GND
U4
SN74LVC1G125DBVR
#OE
A
GND
VCC
Y
DOUT
R18
10R
4.4V
C8
JR2
0R
5-12V

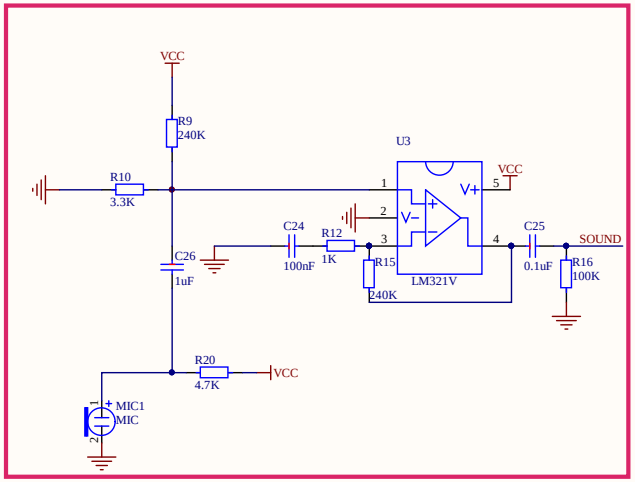
VCC
R9
240K
R10
3.3K
U3
LM321V
V+
V-
C24
100nF
R12
1K
R15
240K
C26
1uF
C25
0.1uF
R16
100K
SOUND
R20
4.7K
MIC1
MIC