REVISIONS							
REV	ZONE	NO.	DESCRIPTION	E.C.	BY	APVD.	DATE
1			RELEASE PER PPD #				

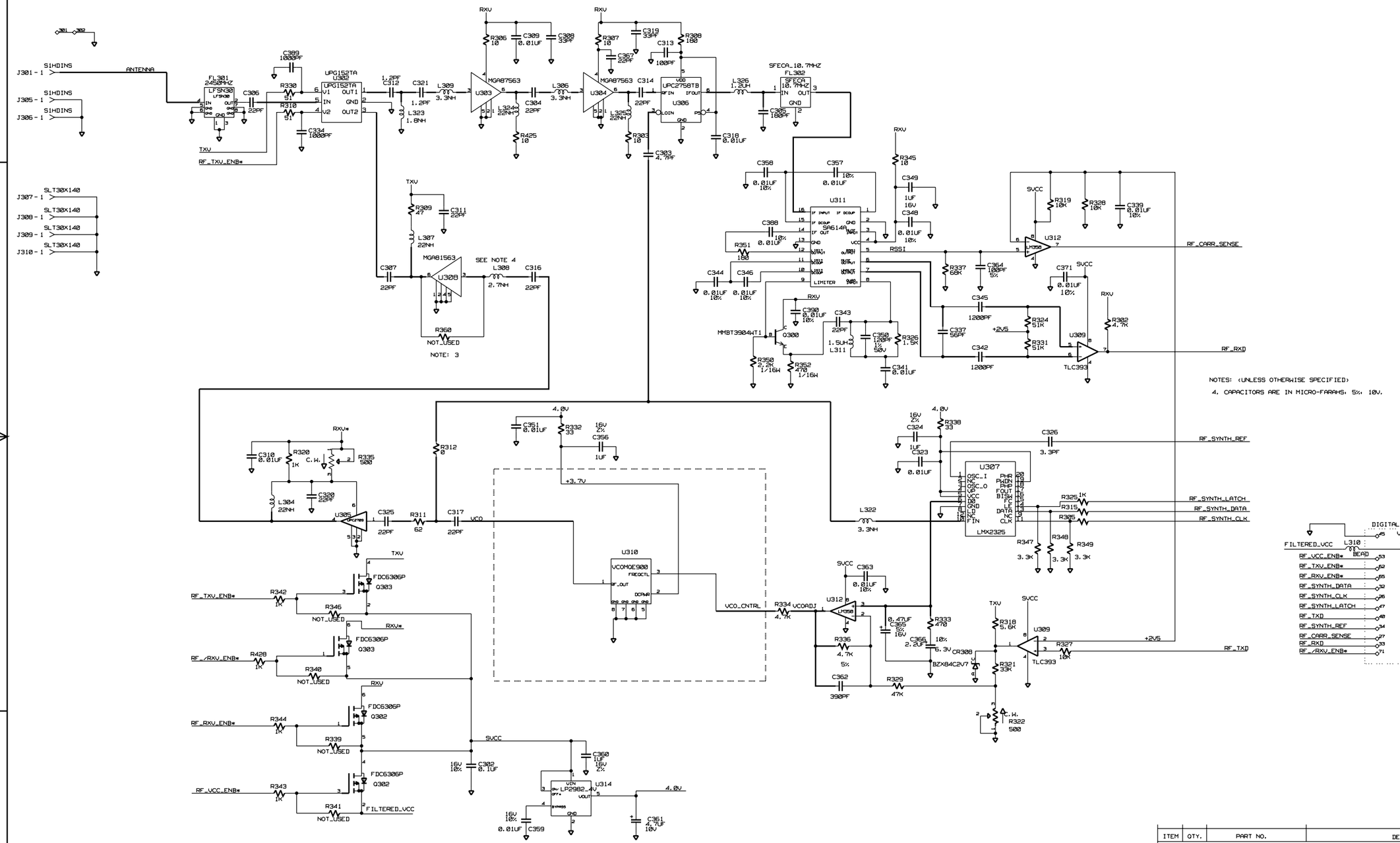

DRAWING LAST_MODIFIED=Mon Jul 24 16:55:19 2000

ITEM	QTY.	PART NO.	DESCRIPTION	REMARKS/REF.SYMBOL
			PARTS LIST	

NEXT ASSY	USED ON

THE DWG. AND SPECIFICATION CONTAINED HEREON ARE PROPRIETARY AND MUST NOT BE USED, COPIED, REPRODUCED OR OTHERWISE DEALT WITH NOR ITS CONTENTS COMMUNICATED TO OTHERS EXCEPT IN ACCORDANCE WITH WRITTEN INSTRUCTIONS RECEIVED FROM SYMBOL TECHNOLOGIES INC.

NO. TRAN 31MAR88

DO NOT SCALE DRAWING

DIMENSIONS ARE IN INCHES

UNLESS OTHERWISE SPECIFIED

	MM	INCH
.xx	±	± .01
.xxx	±	± .005

ANGLES ± 1° FRACTIONS ± 1/64

MATERIAL:

FINISH:

APPROVALS	DATE
DRAWN	
CHECKED	
ENGINEER	
MFG. ENG.	
PRODUCT	
QUALITY	
TEST ENG.	

SYMBOL TECHNOLOGIES INC.

Bohemia, New York

PHASER RF MODULE

SIZE	DWG. NO.	REV
D	17-42507-01	1

SCALE: NONE SHEET 1 OF 1