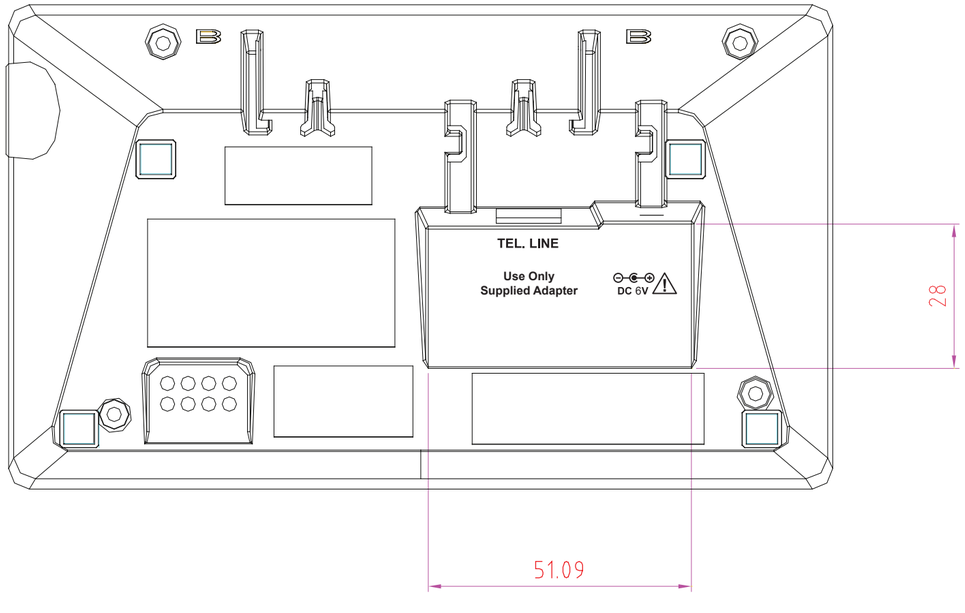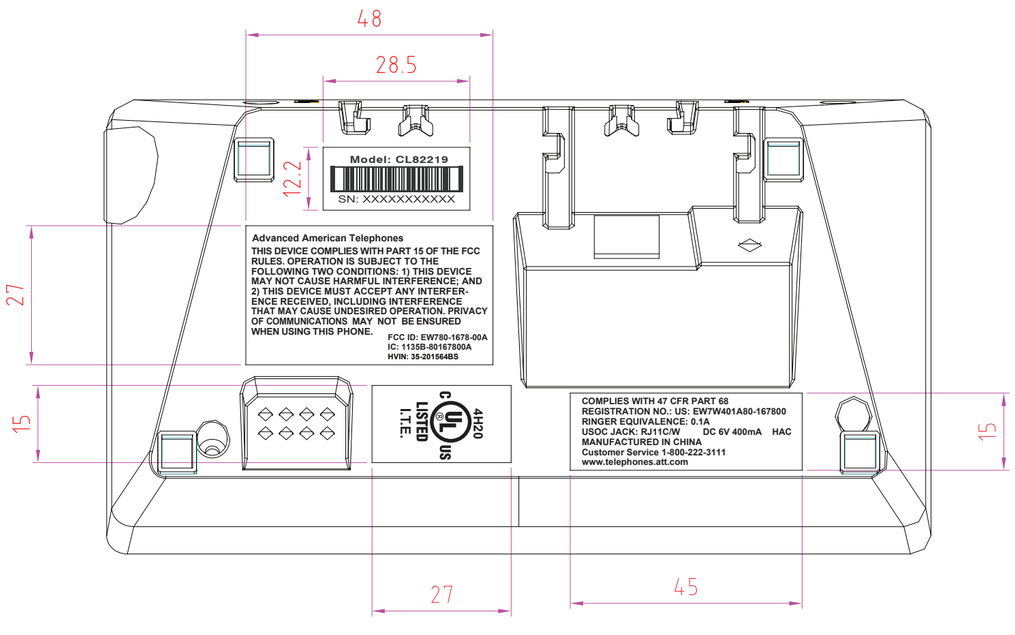CL82xx9 Engraving File