14+ ages

Instructions For Use
Gebrauchsanweisung

V 2.0

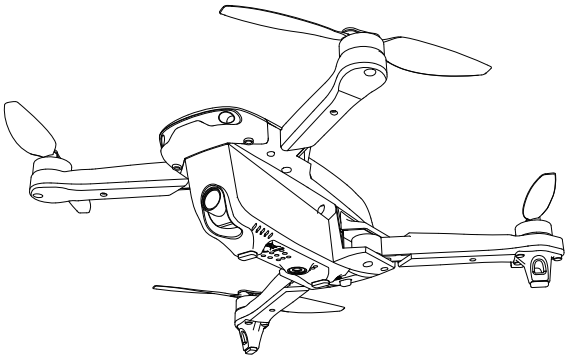

HS175D

+1(855) 888-6699

www.holystone.com

usa@holystone.com (USA)
ca@holystone.com (CA)

eu@holystone.com (EU)

English 01-36

Deutsch 37-72

Contents

1.0 Disclaimer & Warning 01
2.0 Safety Guidelines 01
3.0 Maintenance 05
4.0 Package Contents 06
5.0 Drone's Details 07
6.0 Transmitter Details 08
7.0 Mode Switch 09
8.0 Installation
- 8.1 Propellers 10
- 8.2 TF Card 10
- 8.3 Drone Battery 11
- 8.4 Antenna 11

9.0 Charging
- 9.1 Drone Battery 12
- 9.2 Transmitter Battery 13

10.0 Operation Guide
- 10.1 Download APP 14
- 10.2 Connect to Wi-Fi 14
- 10.3 Paring 15
- 10.4 Calibrating the Compass 16
- 10.5 GPS Searching 17
- 10.6 Calibrating the Gyro 18
- 10.7 Unlocking the Motor 18
- 10.8 One Key Takeoff/Landing 19
- 10.9 Drone Status Indicator States 19

11.0 Functions Details
11.1 Camera Angle Adjustment 20
11.2 Speed Switch 20
11.3 Trimmer Function 21
11.4 Take Photo/Video 22
11.5 Headless Mode 23
11.6 Return to Home (RTH) 24
11.7 Emergency Stop 25
11.8 Optical Flow Positioning 26
12.0 Specifications 28
13.0 Trouble Shooting 30
14.0 Contact Us 30
15.0 General Information 31

1.0 DISCLAIMER & WARNING

1. Please read this Disclaimer & Warning and Safety Guidelines carefully before using our product. This product is not recommended for people under the age of 14. By using this product, you hereby agree to this disclaimer and signify that you have read it fully. You agree that you are responsible for your own conduct and any damages caused while using this product, and its consequences. You agree to only use this product for it's designed purposes and in accordance with local laws, regulations and all applicable policies and guidelines that Holy Stone may provide.
2. When using this product, please be sure to strictly abide by the specification requirements and safety guidelines stated in this document. Any personal injury, property damage, legal disputes and all other adverse events caused by the violation of any of the safety instructions or due to any other factor, WILL NOT be Holy Stone's responsibility.

2.0 SAFETY GUIDELINES

2.1 Check Before Use:

① This product is a high precision drone that integrates various electronic stability and control mechanisms. Please be sure to configure this drone carefully and correctly to ensure safe, accident-free operation.
② Ensure that the batteries of the drone and transmitter are clean, undamaged and fully charged before every use.
③ Ensure that all the propellers are undamaged and are installed in the correct orientation.

④ Ensure to do a thorough check of the product before each use. Inspect the integrity of the parts, any signs of cracks and wear of the propeller, battery power and effectiveness of the indicator, etc. If after doing a complete check of the drone any problems are found, please refrain from using it until the problem has been resolved.

2.2 Flight Environment:

Avoid flying over or near obstacles, crowds, high voltage power lines, trees, airport or bodies of water.

DO NOT fly near strong electromagnetic sources such as power lines and base stations as it may affect the onboard compass.

DO NOT use this drone in adverse weather conditions such as rain, snow, fog, and wind.

2.3 Operation Requirements:

① DO NOT use this product to follow any moving vehicles.
② During the flight, turn off the motors only in case of an emergency.
③ Fly the drone back to you as soon as you are notified that the battery is running low.
④ This product should not be used while drinking alcohol or consuming drugs, if you are feeling fatigued, taking medicine, or feeling any physical discomfort.
⑤ Be aware of the volume of noise that the drone produces. Please ensure to keep your distance to avoid ear damage.

⑥ **Stay away from the rotating propellers and motors.**

⑦ **DO NOT fly in any spaces where drones are prohibited. Please respect people's right to privacy by not flying your drone close to others.**

2.4 Use of Battery:

① Please ensure batteries are fitted in the correct orientation as shown in the instruction manual.
② Avoid short circuits by fitting the batteries correctly, and do not crush or squeeze the batteries as this could cause the risk of a fire or explosion.
③ DO NOT mix new and old batteries as this can lead to a poor performance of the product.
④ Please dispose of used batteries carefully, do not litter and recycle where ever possible.
⑤ DO NOT expose dead batteries to heat or fire or they may explode.
⑥ If the device is not going to be used for an extended period of time, please remove batteries to prevent potential damage from to the drone battery leakage.

⑦ Only use the USB charging cable that comes with the drone to charge the battery.

⑧ DO NOT connect the battery directly to wall outlets or car cigarette -lighter sockets as this will damage your battery as they are a different voltage.

⑨ DO NOT attempt to disassemble or modify the battery in any way

⑩ DO NOT use the battery if it gives off an odor, generates heat, becomes discolored, deformed or appears abnormal in any way. If any of these situations occur while the battery is in use or being charged, remove it from the device or charger immediately and discontinue use.

⑪ DO NOT pierce the battery casing with a nail or any other sharp object, break it open with a hammer, or step on it! Dispose or recycle this battery as it may cause personal injury or damage to your drone.

⑫ Always charge the batteries on a fireproof surface and away from combustible materials. DO NOT charge on surfaces that can catch fire. This includes: wood, cloth, carpet, or on the application's device.

⑬ DO NOT immerse the battery in water or get it wet.

⑭ DO NOT solder battery terminal in any way.

⑮ Keep batteries out of reach of children or pets.

⑯ DO NOT short-circuit the battery by connecting wires or any other metal object to the positive(+) and negative(-) terminals.

Li-Po Battery Disposal & Recycling

Waste Lithium-polymer batteries must not be placed with household trash. Please contact local environmental or waste agency or the waste agency or the supplier of your model or your nearest Li-Po battery recycling center.

3.0 MAINTENANCE

① Clean the product after each use with a clean, soft cloth.
② Avoid prolonged exposure to direct sunlight and avoid buildup of heat on the drone or batteries.
③ This device is not waterproof and must not be submerged or subjected in water under any circumstance. Failure to keep the device completely dry will result in the failure and permanent damage to the unit. Be aware that although it might be dry where you are, droplets of rain or mist from a river or waterfall could be damaging your drone where it is flying.
④ Frequently Check the charging plug and other accessories for signs of damage. If any part of the device or cables are damaged, avoid use or charging until the device can be serviced.

4.0 PACKAGE CONTENTS

×1	×1	×2
Drone	Transmitter	Drone Battery
×8	×2	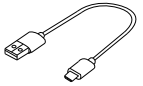 ×1
Spare Propeller	USB Charging Cable	USB Charging Cable for Transmitter
×1	×1	
Screwdriver	Instructions For Use	

5.0 DRONE'S DETAILS

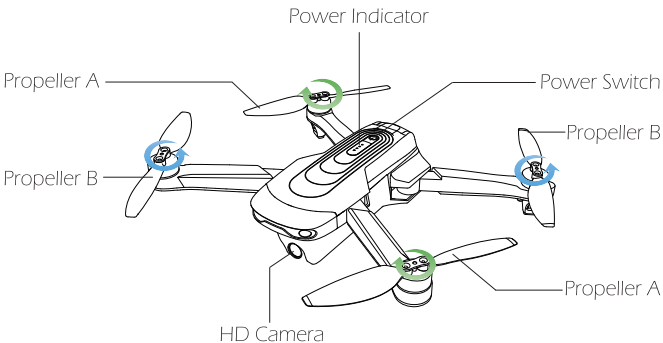

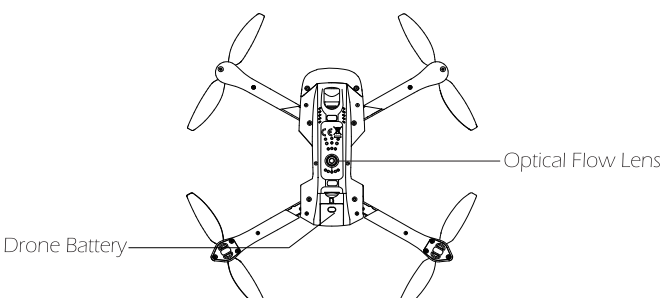

6.0 TRANSMITTER DETAILS

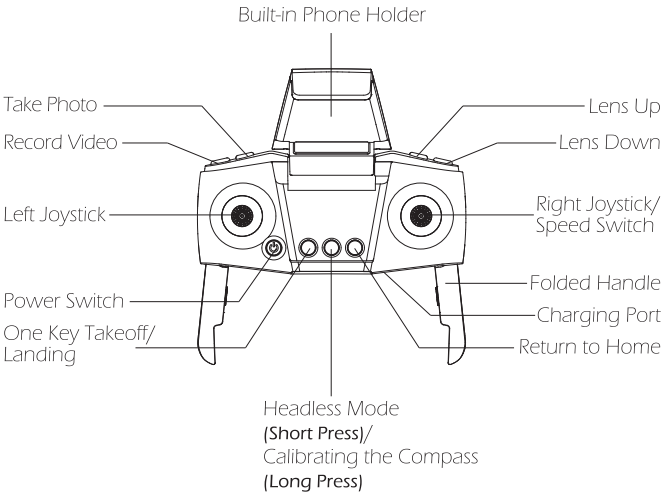

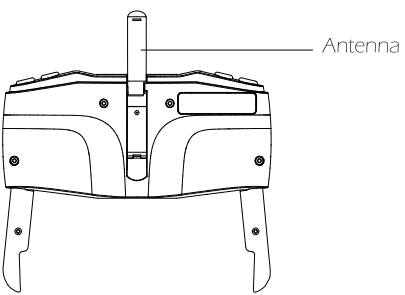

7.0 MODE SWITCH

7.1 MODE 2 (Left hand throttle MODE 2 will be default setting.)

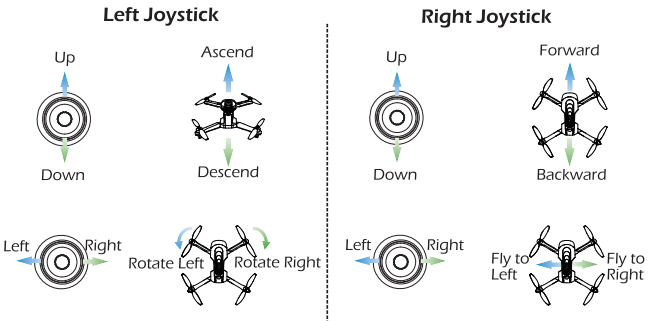

7.2 MODE 1

To enter MODE 1, turn on the transmitter while holding the "Record Video" button. (Please do not release the "Record Video" button until the transmitter is powered on.)

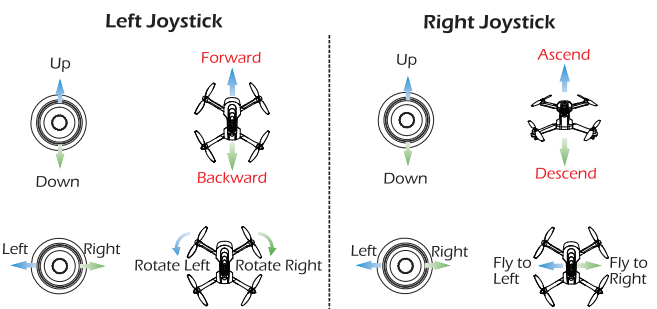

8.0 INSTALLATION

8.1 Propellers

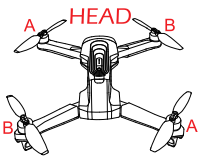

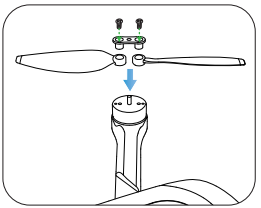

Connect each propeller to its corresponding motor shaft, either position "A/B" , then lock the propeller to the motor shaft with two screws.

Attention: Pay attention to the "A" or "B" is printed on the each propeller. The drone will not fly unless the correct propeller is installed on the correct motor shaft.

8.2 TF Card

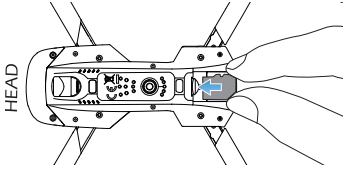

To store your photos and videos, insert the TF card (not included) into the slot as shown above before turning on the drone. The drone supports TF card up to 64 GB.

8.3 Drone Battery

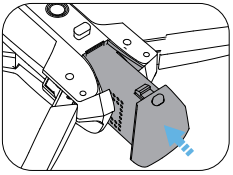

Pic 1

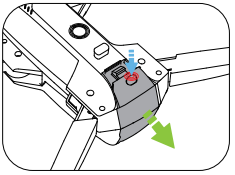

Pic 2

Installation: Push the battery correctly into the drone battery compartment. Make sure that you hear a click sound indicating the battery is firmly installed. (Pic 1)

Removal: Press the lock button on the battery and pull it back to remove the battery from the fuselage. (Pic 2)

Attention: The battery should be installed firmly, failure to do so may affect the flight safety of your drone. The drone may crash due to power-cut during the flight.

8.4 Antenna

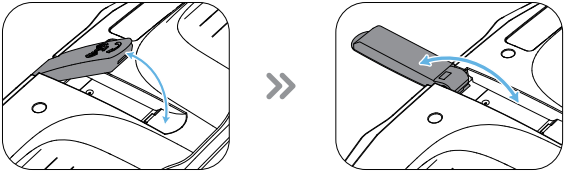

Before flying, please adjust the antenna on the back of the transmitter so it is facing outward.

9.0 CHARGING

9.1 Drone Battery

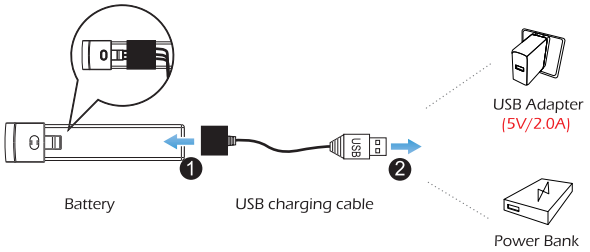

1) When the drone battery runs low, the indicator lights on the drone will flashes continuously.
2) Remove the battery and connect the USB charging cable to the battery charging interface.
3) Plug the USB charging cable into a USB charging port on the power bank or USB adapter (5V/2.0A).
4) The green indicator light on the USB charging cable will flash slowly when the battery is charging, and will turn solid when the battery is fully charged.
5) Charging time: about 150 minutes.

· Before charging, please check the contents of the "Use of Battery" section of the "Safety Guidelines" carefully!
· When the charging fails, the green light on the charging cable will flash quickly.

9.2 Transmitter Battery

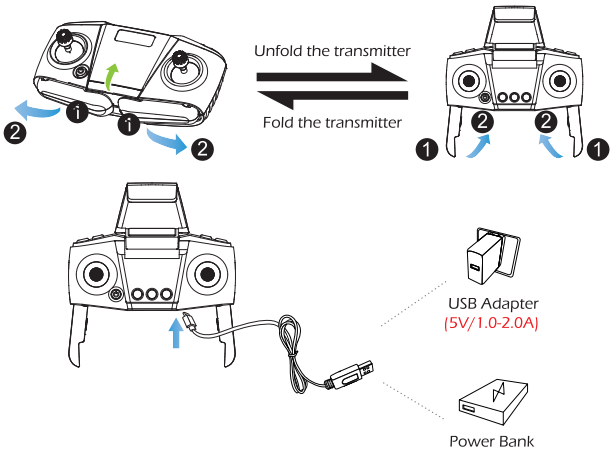

1) When the transmitter battery runs low, the transmitter will continue to sound the "DiDiDi..." alarm.

2) Connect the USB charging cable to the charging interface.

3) Plug the USB charging cable into a USB charging port on the computer, power bank or USB adapter (5V/1.0 to 2.0A).

4) The red indicator light on the transmitter will turn on when the battery is charging, and will turn off when the battery is fully charged.

5) Charging time: about 60 minutes.

· Before charging, please check the contents of the "Use of Battery" section of the "Safety Guidelines" carefully!

10.0 OPERATION GUIDE

10.1 Download APP

iOS

Android APP on Google play

Scan the QR code, corresponding to either App Store™ or Google Play™ Store and download the HS GPS V5 app for free.

10.2 Connect to Wi-Fi

Connect your smart phone to the Wi-Fi network created by the drone. Check the drone's status in the HS GPS V5 app.

① Your smartphone will launch a search of the available Wi-Fi networks:

② Select the Wi-Fi network: HolyStoneFPV_***_******.

③ Wait for several seconds until your smartphone connect to the Wi-Fi network of the drone.

This connection is generally represented by the Wi-Fi logo appearing on your smartphone's screen.

④ Launch the HS GPS V5 application.

> The connection between your smartphone and the drone will be established automatically.