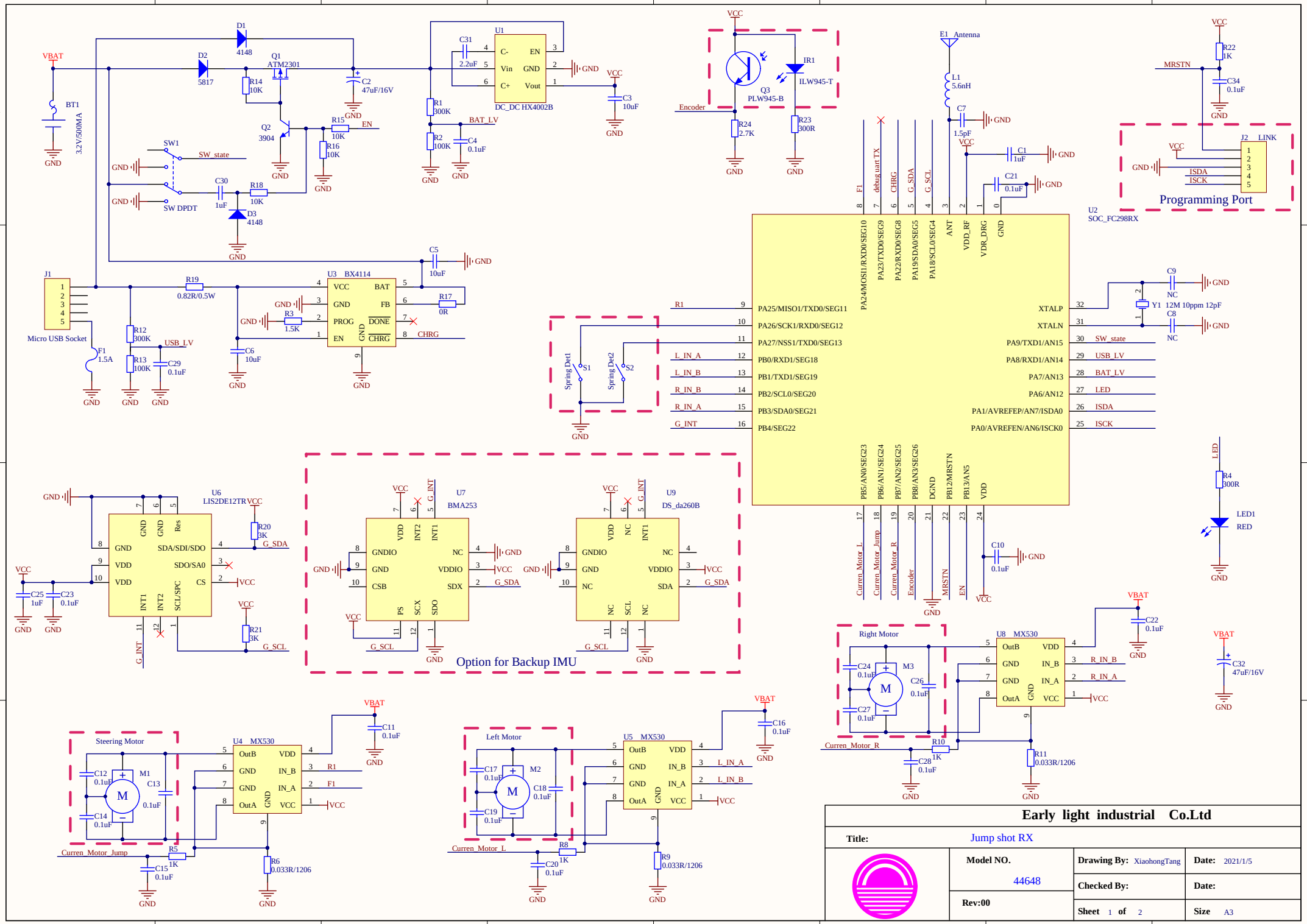
VBAT
BT1
3.2V/500MA
GND
D1
4148
D2
5817
Q1
ATM2301
R14
10K
C2
47uF/16V
Q2
3904
R15
10K
EN
R16
10K
SW1
SW_state
SW DPDT
C30
1uF
R18
10K
D3
4148
U1
DC_DC HX4002B
C- EN
Vin GND
C+ Vout
C31
2.2uF
C3
10uF
R1
300K
R2
100K
BAT_LV
C4
0.1uF
C5
10uF
J1
Micro USB Socket
F1
1.5A
R19
0.82R/0.5W
R12
300K
R13
100K
USB_LV
C29
0.1uF
U3 BX4114
VCC BAT
GND FB
PROG DONE
EN CHRG
R3
1.5K
R17
0R
CHRG
C6
10uF
VCC
IR1
ILW945-T
Q3
PLW945-B
Encoder
R24
2.7K
R23
300R
E1 Antenna
L1
5.6nH
C7
1.5pF
C1
1uF
C21
0.1uF
MRSTN
R22
1K
C34
0.1uF
J2 LINK
ISDA
ISCK
Programming Port
U2
SOC_FC298RX
PA24/MOSI/RXD0/SEG10
PA23/TXD0/SEG9
PA22/RXD0/SEG8
PA19/SDA0/SEG5
PA18/SCL0/SEG4
ANT
VDD_RF
VDR_DRG
GND
F1
debug uart TX
CHRG
G_SDA
G_SCL
PA25/MISO1/TXD0/SEG11
PA26/SCK1/RXD0/SEG12
PA27/NSS1/TXD0/SEG13
PB0/RXD1/SEG18
PB1/TXD1/SEG19
PB2/SCL0/SEG20
PB3/SDA0/SEG21
PB4/SEG22
R1
L_IN_A
L_IN_B
R_IN_B
R_IN_A
G_INT
XTALP
XTALN
PA9/TXD1/AN15
PA8/RXD1/AN14
PA7/AN13
PA6/AN12
PA1/AVREFEP/AN7/ISDA0
PA0/AVREFEN/AN6/ISCK0
SW_state
USB_LV
BAT_LV
LED
ISDA
ISCK
C9
NC
Y1 12M 10ppm 12pF
C8
NC
Spring Det1
Spring Det2
S1
S2
PB5/AN0/SEG23
PB6/AN1/SEG24
PB7/AN2/SEG25
PB8/AN3/SEG26
DGND
PB12/MRSTN
PB13/AN5
VDD
Curren_Motor_L
Curren_Motor_Jump
Curren_Motor_R
Encoder
MRSTN
EN
C10
0.1uF
LED
R4
300R
LED1
RED
U6
LIS2DE12TR
GND GND Res
SDA/SDI/SDO
SDO/SA0
VDD VDD
CS
INT1 INT2 SCL/SPC
R20
3K
G_SDA
R21
3K
G_SCL
G_INT
C25
1uF
C23
0.1uF
U7
BMA253
VDD INT2 INT1
GNDIO NC
GND VDDIO
CSB SDX
PS SCX SDO
U9
DS_da260B
VDD NC INT1
GNDIO NC
GND VDDIO
NC SDA
NC SCL NC
Option for Backup IMU
Right Motor
M3
C24
0.1uF
C26
0.1uF
C27
0.1uF
U8 MX530
OutB VDD
GND IN_B
GND IN_A
OutA VCC
R_IN_B
R_IN_A
C22
0.1uF
C32
47uF/16V
R10
1K
C28
0.1uF
R11
0.033R/1206
Steering Motor
M1
C12
0.1uF
C13
0.1uF
C14
0.1uF
U4 MX530
R1
F1
C11
0.1uF
R5
1K
C15
0.1uF
R6
0.033R/1206
Curren_Motor_Jump
Left Motor
M2
C17
0.1uF
C18
0.1uF
C19
0.1uF
U5 MX530
L_IN_A
L_IN_B
C16
0.1uF
R8
1K
C20
0.1uF
R9
0.033R/1206
Curren_Motor_L
Early light industrial Co.Ltd
Title:
Jump shot RX
Model NO.
44648
Rev:00
Drawing By: XiaohongTang
Date: 2021/1/5
Checked By:
Date:
Sheet 1 of 2
Size A3