APPENDIX E

: SCHEMATIC DIAGRAM(S)

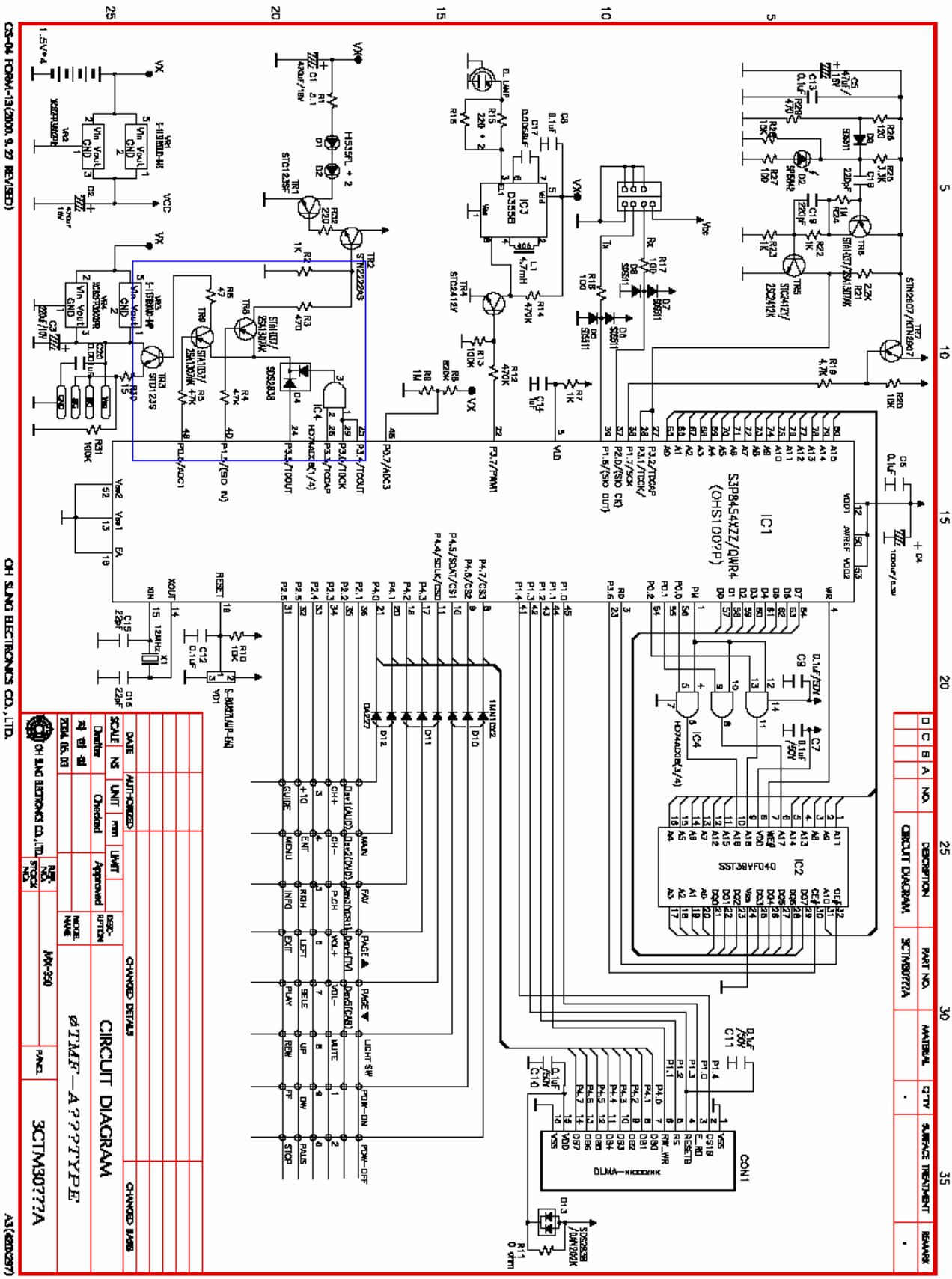
CIRCUIT DIAGRAM
3CTM30777A
IC1
S3P8454XZZ/QWR4
(OHS1D07P)
IC2
SST39VF040
IC3
D3555B
IC4
HD74HC00(1/4)
CON1
DLMA-XXXXXXXX
CHANGED DETAILS
CHANGED BASIS
CIRCUIT DIAGRAM
MX-550
3CTM30777A
CH SUNG ELECTRONICS CO., LTD.

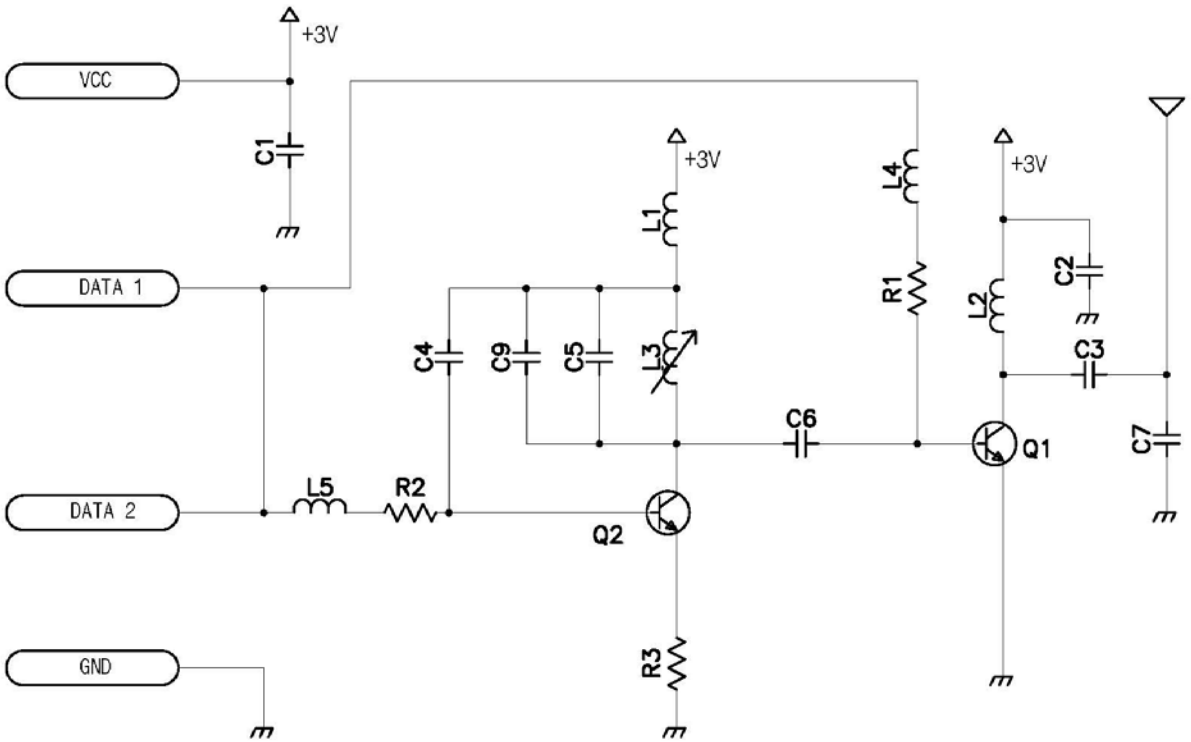

기호	변경 내용	시방 번호	년 월 일	수정인	승인
0					
1					
2					
3					
4					
5					
6					
7					
8					

KOREA I.S Co.,Ltd.

작 성	검 토	승 인

Title	SCHEMATIC KTM-3020-03-0418-OHS
Size	A4
DWG No.	01-S-OSM418-02
Rev	02
Date	2003.04.07
Drawn	pytzzang
File	KTM-3020-30-0418-OHS-01-S.sch
Sheet	1 of 1
P/L No.	OSM418_Tx_0r2.XLS
P/L Ver.	02
PCB No.	OSM418_Tx_0r2.PCB
PCB Ver.	02