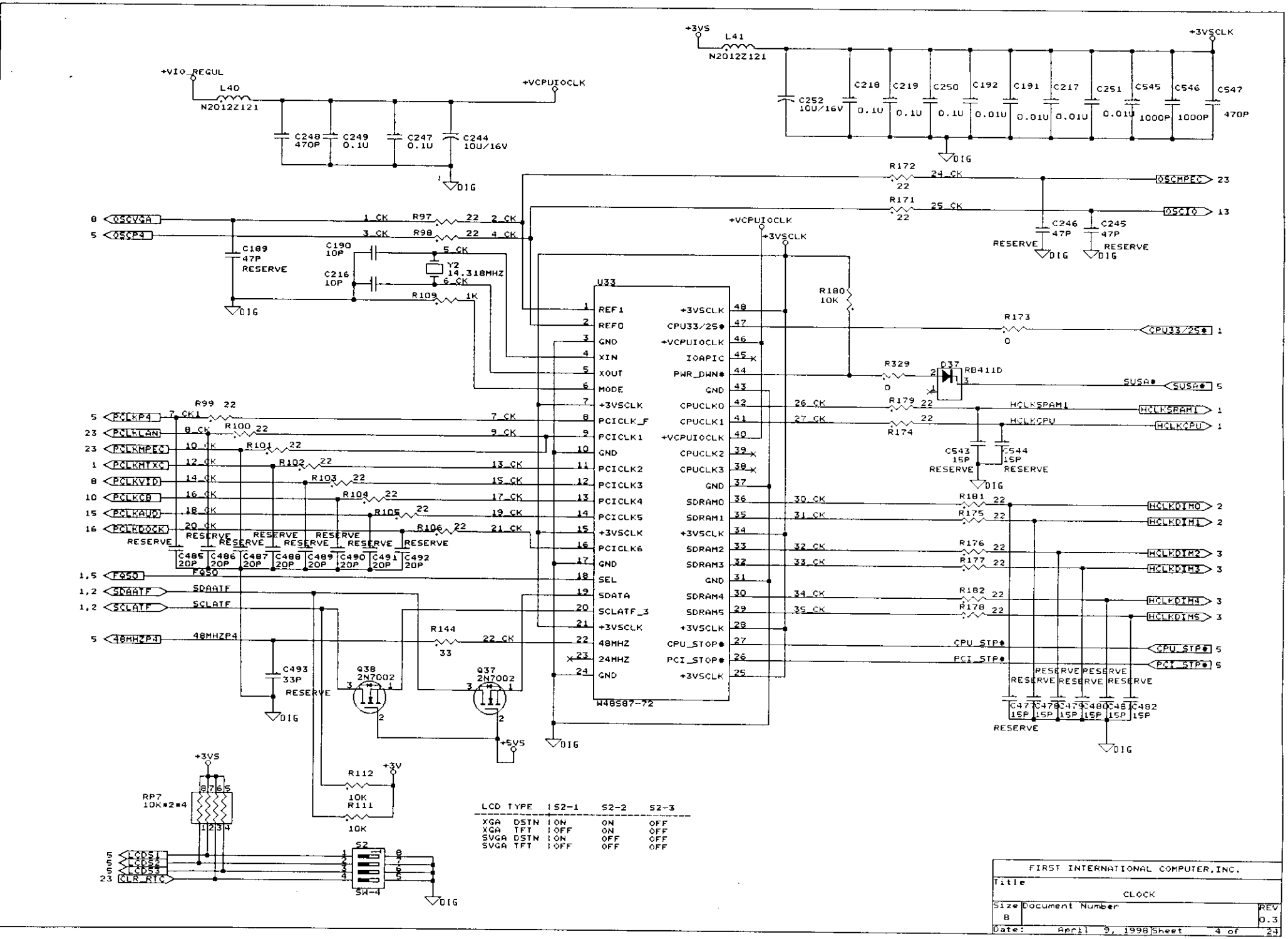
+3VS
L41
N2012Z121
+3VSCLK
C252 100/16V
C218 0.1U
C219 0.1U
C250 0.1U
C192 0.01U
C191 0.01U
C217 0.01U
C251 0.01U
C545 1000P
C546 1000P
C547 470P
DIG
+VIO_REGUL
L40
N2012Z121
+VCPUIOCLK
C248 470P
C249 0.1U
C247 0.1U
C244 100/16V
R172 22
R171 22
OSCMPEC
OSCIO
C246 47P
C245 47P
RESERVE
OSCVGA
OSCP4
R97 22
R98 22
C189 47P
C190 10P
C216 10P
Y2 14.318MHZ
R109 1K
U33
W48S87-72
REF1
REF0
GND
XIN
XOUT
MODE
+3VSCLK
PCICLK_F
PCICLK1
PCICLK2
PCICLK3
PCICLK4
PCICLK5
PCICLK6
SEL
SDATA
SCLATF_3
48MHZ
24MHZ
CPU33/25*
IOAPIC
PWR_DWN*
CPUCLK0
CPUCLK1
CPUCLK2
CPUCLK3
SDRAM0
SDRAM1
SDRAM2
SDRAM3
SDRAM4
SDRAM5
CPU_STOP*
PCI_STOP*
R180 10K
R173 0
CPU33/25*
R329 0
D37 RB411D
SUSA*
R179 22
R174 22
HCLKSPAM1
HCLKCPU
C543 15P
C544 15P
PCLKP4
PCLKLAN
PCLKMPEC
PCLKMTXC
PCLKVID
PCLKCB
PCLKAUD
PCLKDOCK
R99 22
R100 22
R101 22
R102 22
R103 22
R104 22
R105 22
R106 22
C485 20P
C486 20P
C487 20P
C488 20P
C489 20P
C490 20P
C491 20P
C492 20P
FQ50
SDAATF
SCLATF
48MHZP4
R144 33
C493 33P
Q38 2N7002
Q37 2N7002
+5VS
R181 22
R175 22
R176 22
R177 22
R182 22
R178 22
HCLKDIM0
HCLKDIM1
HCLKDIM2
HCLKDIM3
HCLKDIM4
HCLKDIM5
CPU_STP*
PCI_STP*
C477 15P
C478 15P
C479 15P
C480 15P
C481 15P
C482 15P
+3V
R112 10K
R111 10K
RP7 10K*2*4
LCDS1
LCDS2
LCDS3
CLR_RTC
S2
SW-4
LCD TYPE | S2-1 | S2-2 | S2-3
XGA DSTN | ON | ON | OFF
XGA TFT | OFF | ON | OFF
SVGA DSTN | ON | OFF | OFF
SVGA TFT | OFF | OFF | OFF
FIRST INTERNATIONAL COMPUTER,INC.
Title
CLOCK
Size B
Document Number
REV 0.3
Date: April 9, 1998
Sheet 4 of 24

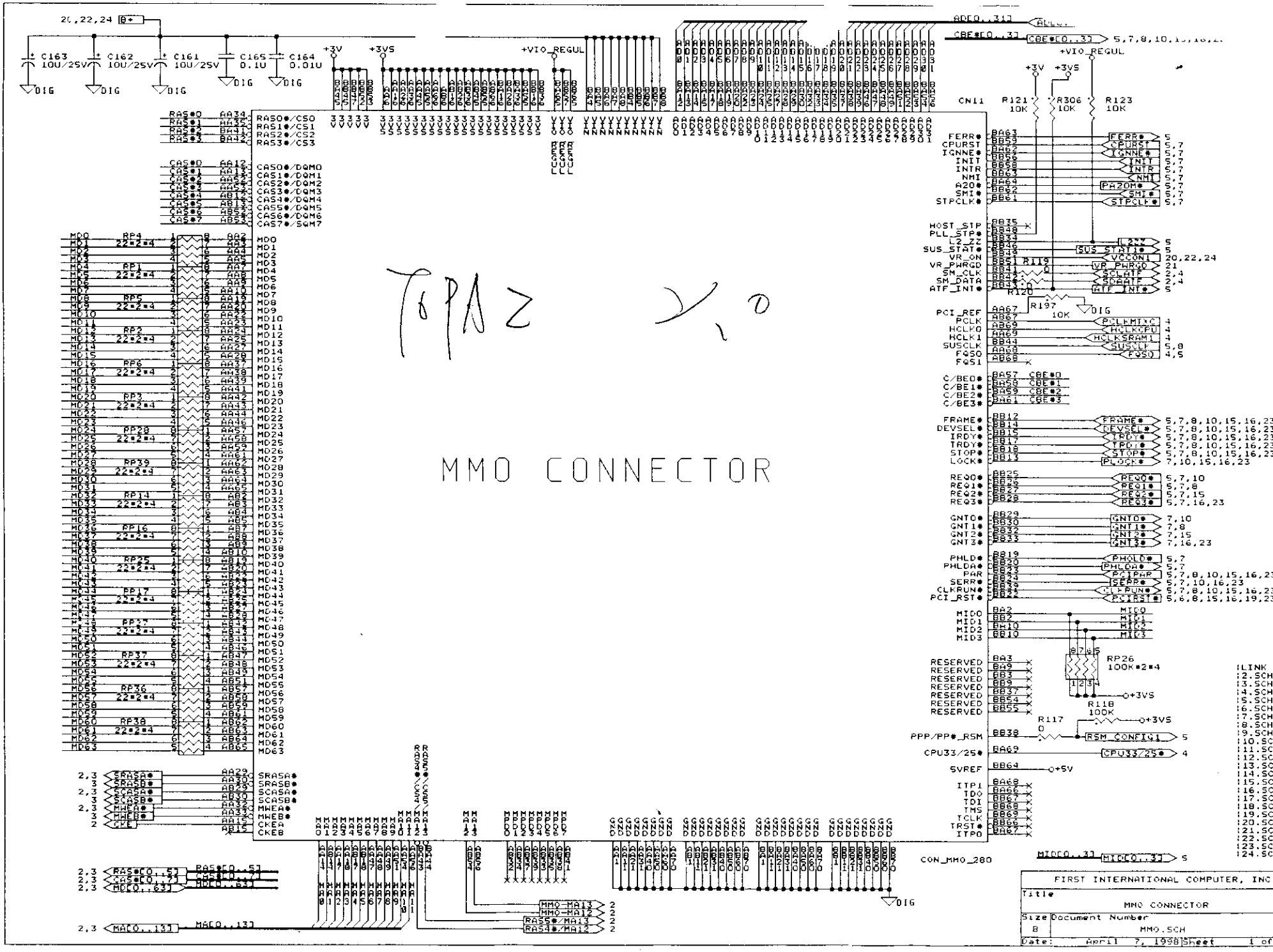
TOPAZ 2.0
MMO CONNECTOR
CN11
CON_MMO_280
+3V
+3VS
+VIO_REGUL
C163 10U/25V
C162 10U/25V
C161 10U/25V
C165 0.1U
C164 0.01U
DIG
R121 10K
R306 10K
R123 10K
R197 10K
R120
R119 0
R117 0
R118 100K
RP26 100K*2*4
FIRST INTERNATIONAL COMPUTER, INC
Title
MMO CONNECTOR
Size B
Document Number
MMO.SCH
Date: April 7, 1998
Sheet 1 of

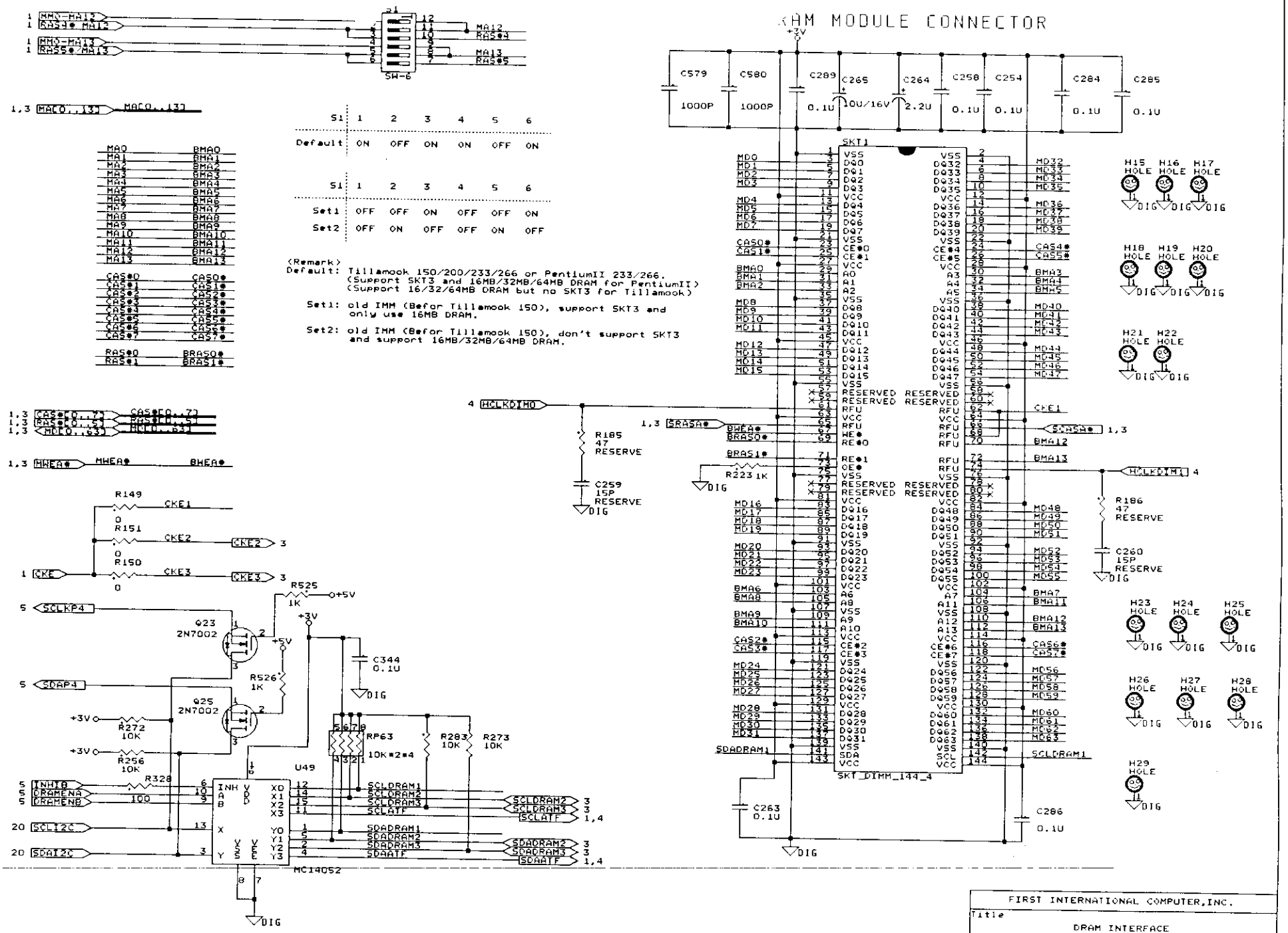
DRAM MODULE CONNECTOR
SW-6
S1 1 2 3 4 5 6
Default ON OFF ON ON OFF ON
S1 1 2 3 4 5 6
Set1 OFF OFF ON OFF OFF ON
Set2 OFF ON OFF OFF ON OFF
(Remark)
Default: Tillamook 150/200/233/266 or PentiumII 233/266.
(Support SKT3 and 16MB/32MB/64MB DRAM for PentiumII)
(Support 16/32/64MB DRAM but no SKT3 for Tillamook)
Set1: old IMM (Befor Tillamook 150), support SKT3 and only use 16MB DRAM.
Set2: old IMM (Befor Tillamook 150), don't support SKT3 and support 16MB/32MB/64MB DRAM.
SKT1
SKT_DIMM_144_4
MC14052
U49
RP63
10K*2*4
Q23 2N7002
Q25 2N7002
R149 0
R151 0
R150 0
R525 1K
R526 1K
R272 10K
R256 10K
R283 10K
R273 10K
R328 100
R185 47 RESERVE
R186 47 RESERVE
R223 1K
C259 15P RESERVE
C260 15P RESERVE
C344 0.1U
C263 0.1U
C286 0.1U
C579 1000P
C580 1000P
C289 0.1U
C265 10U/16V
C264 2.2U
C258 0.1U
C254 0.1U
C284 0.1U
C285 0.1U
H15 HOLE
H16 HOLE
H17 HOLE
H18 HOLE
H19 HOLE
H20 HOLE
H21 HOLE
H22 HOLE
H23 HOLE
H24 HOLE
H25 HOLE
H26 HOLE
H27 HOLE
H28 HOLE
H29 HOLE
FIRST INTERNATIONAL COMPUTER,INC.
Title
DRAM INTERFACE
Size B
Document Number
16/32/64MB OPTION
REV 0.3
Date: April 6, 1998
Sheet 2 of 24

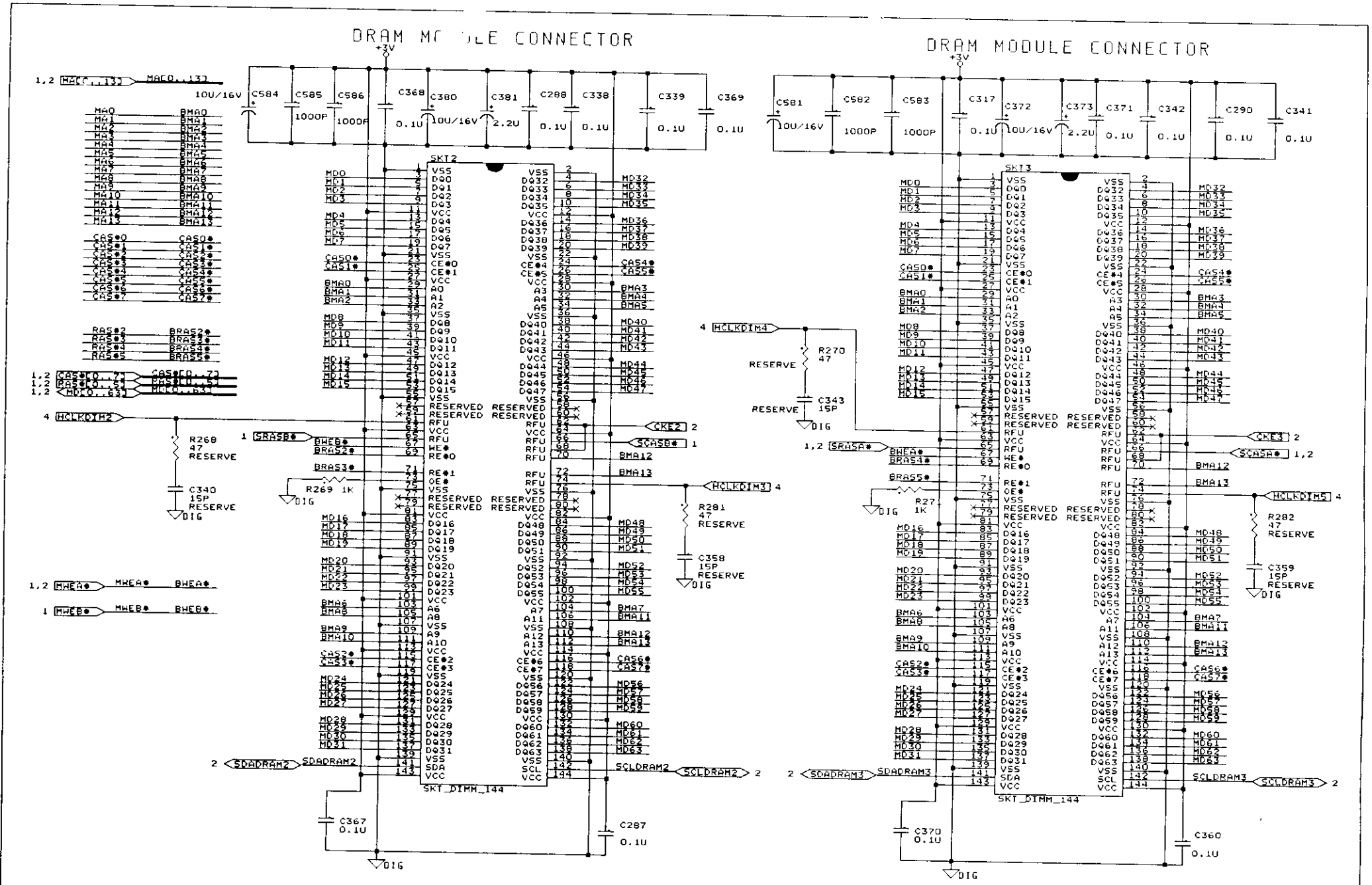
DRAM MODULE CONNECTOR
DRAM MODULE CONNECTOR
SKT2
SKT3
SKT_DIMM_144
SKT_DIMM_144
C584 10U/16V
C585 1000P
C586 1000P
C368 0.1U
C380 10U/16V
C381 2.2U
C288 0.1U
C338 0.1U
C339 0.1U
C369 0.1U
C581 10U/16V
C582 1000P
C583 1000P
C317 0.1U
C372 10U/16V
C373 2.2U
C371 0.1U
C342 0.1U
C290 0.1U
C341 0.1U
R268 47 RESERVE
C340 15P RESERVE
R269 1K
R270 47 RESERVE
C343 15P RESERVE
R281 47 RESERVE
C358 15P RESERVE
R271 1K
R282 47 RESERVE
C359 15P RESERVE
C367 0.1U
C287 0.1U
C370 0.1U
C360 0.1U
DIG
FIRST INTERNATIONAL COMPUTER,INC.
Title
DRAM INTERFACE
Size B
Document Number
16/32/64MB OPTION
REV 0.3
Date: April 6, 1998
Sheet 3 of 24

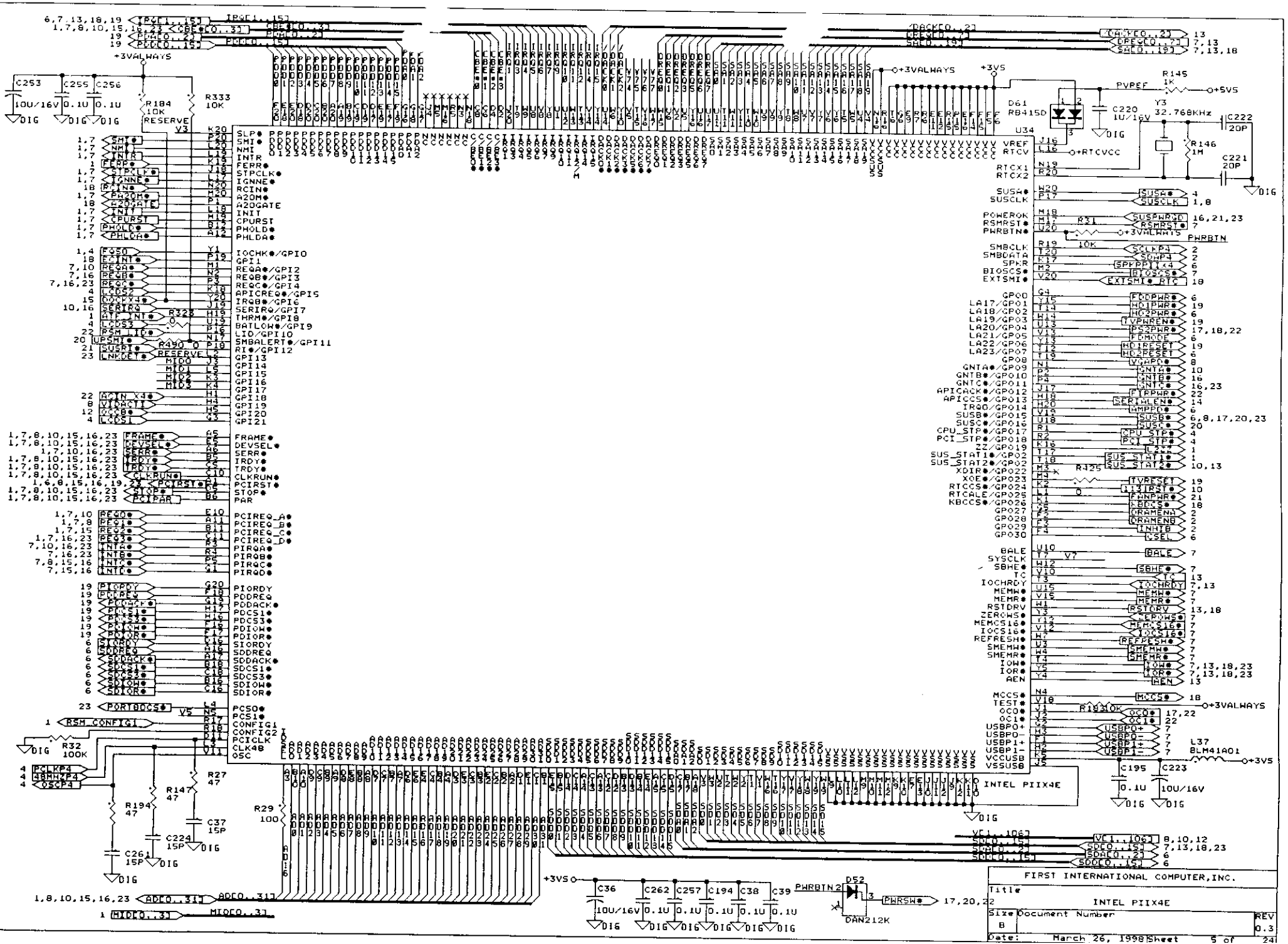
INTEL PIIX4E
U34
FIRST INTERNATIONAL COMPUTER,INC.
Title
INTEL PIIX4E
Size B
Document Number
REV 0.3
Date: March 26, 1998
Sheet 5 of 24

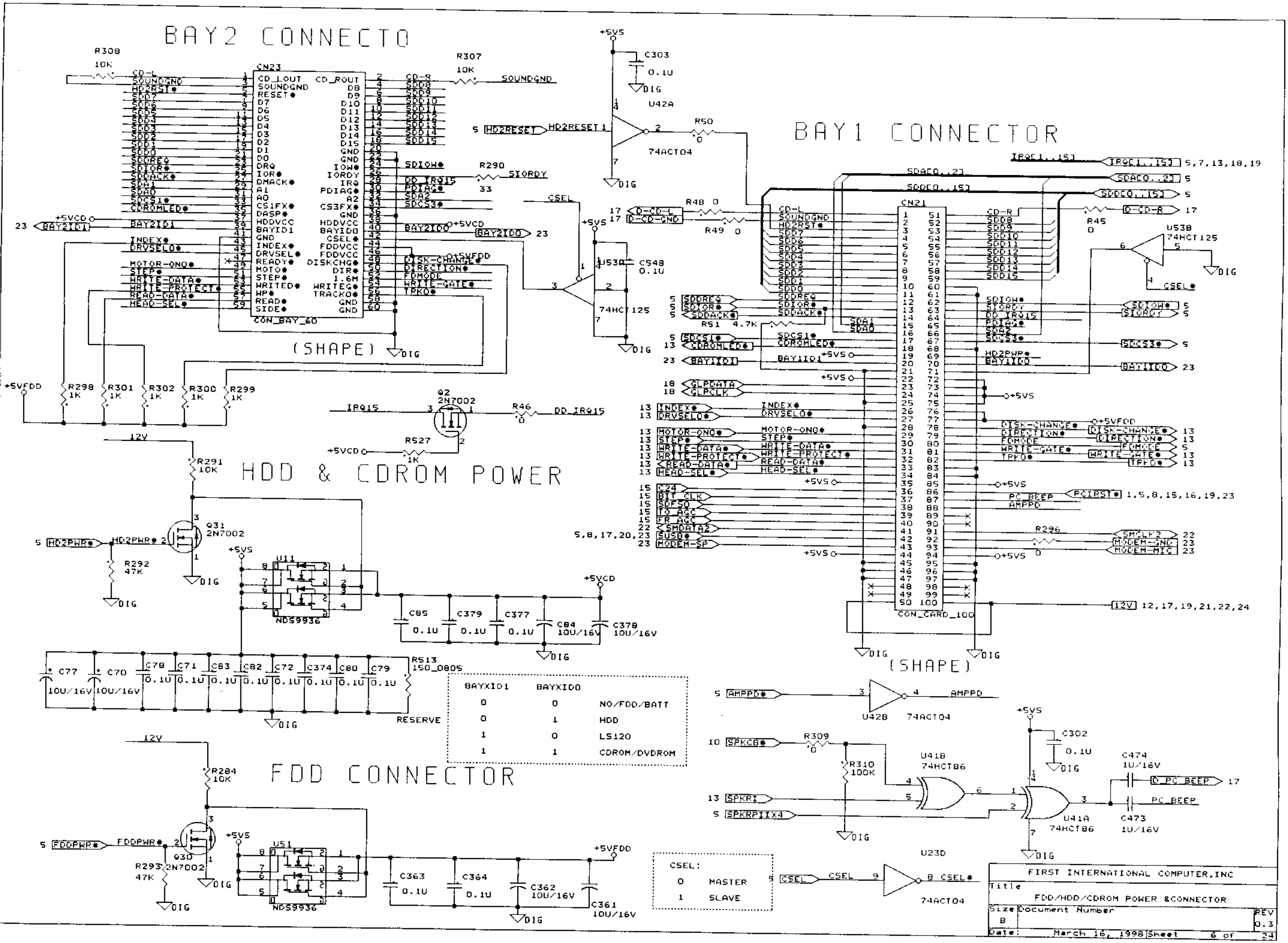
BAY2 CONNECTO
BAY1 CONNECTOR
HDD & CDROM POWER
FDD CONNECTOR
CN23
CON_BAY_60
CN21
CON_CARD_100
(SHAPE)
U42A 74ACT04
U53A 74HCT125
U53B 74HCT125
U42B 74ACT04
U41B 74HCT86
U41A 74HCT86
U23D 74ACT04
U11 NDS9936
U51 NDS9936
Q2 2N7002
Q31 2N7002
Q30 2N7002
BAYXID1 BAYXID0
0 0 NO/FDD/BATT
0 1 HDD
1 0 LS120
1 1 CDROM/DVDROM
CSEL:
0 MASTER
1 SLAVE
FIRST INTERNATIONAL COMPUTER,INC
Title
FDD/HDD/CDROM POWER &CONNECTOR
Size B
Document Number
REV 0.3
Date: March 16, 1998
Sheet 6 of 24

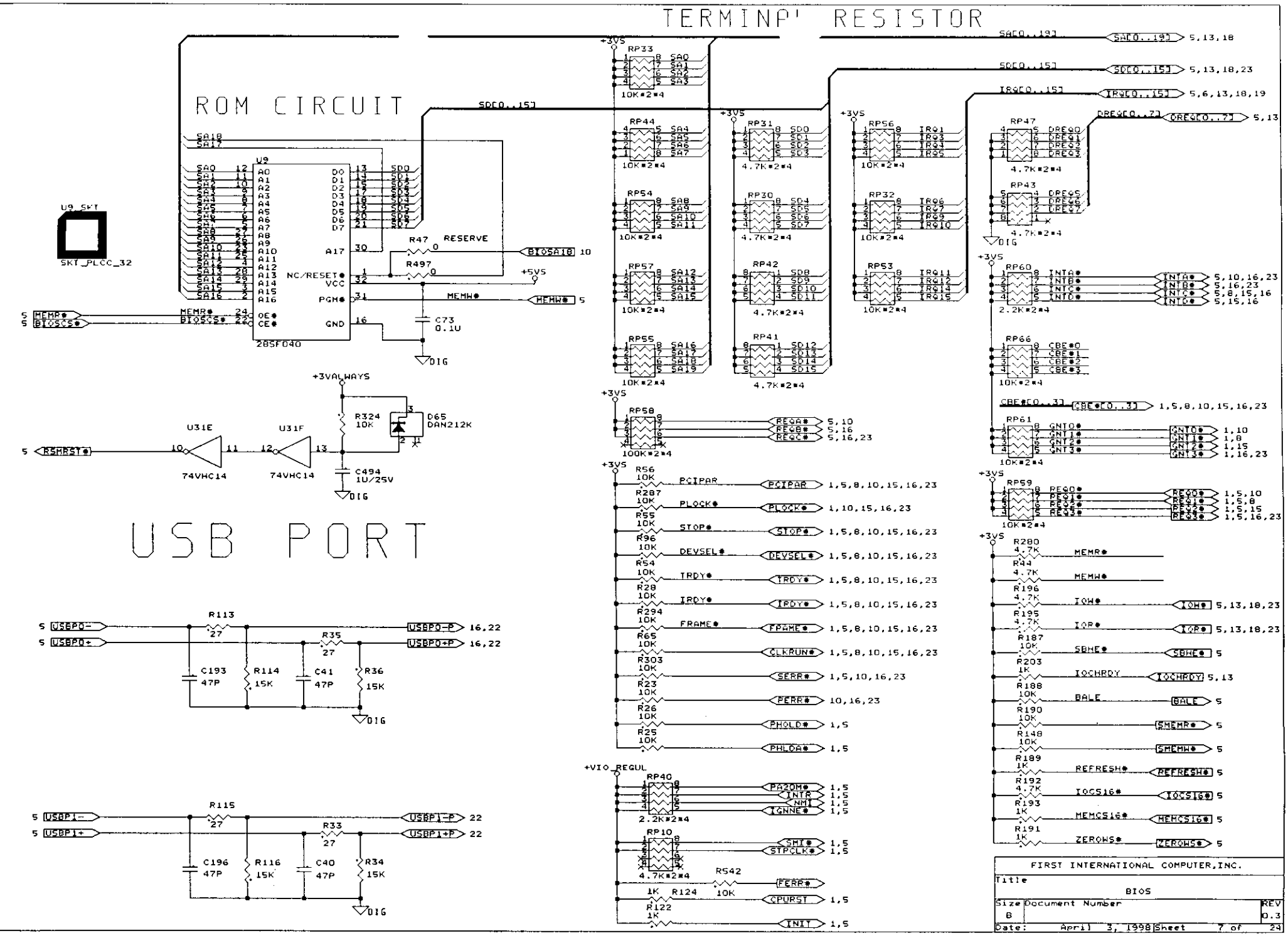
TERMINAT RESISTOR
ROM CIRCUIT
USB PORT
U9
28SF040
U9_SKT
SKT_PLCC_32
RP33
RP44
RP54
RP57
RP55
RP31
RP30
RP42
RP41
RP56
RP32
RP53
RP47
RP43
RP60
RP66
RP61
RP59
RP58
RP40
RP10
R47 RESERVE
R497
C73 0.1U
R324 10K
D65 DAN212K
C494 1U/25V
U31E
U31F
74VHC14
R113 27
R35 27
C193 47P
R114 15K
C41 47P
R36 15K
R115 27
R33 27
C196 47P
R116 15K
C40 47P
R34 15K
R280 4.7K
R44 4.7K
R196 4.7K
R195 4.7K
R187 10K
R203 1K
R188 10K
R190 10K
R148 10K
R189 1K
R192 4.7K
R193 1K
R191 1K
R56 10K
R287 10K
R55 10K
R96 10K
R54 10K
R28 10K
R294 10K
R65 10K
R303 10K
R23 10K
R26 10K
R25 10K
R124 10K
R122 1K
R542 10K
FIRST INTERNATIONAL COMPUTER,INC.
Title
BIOS
Size B
Document Number
REV 0.3
Date: April 3, 1998
Sheet 7 of 24

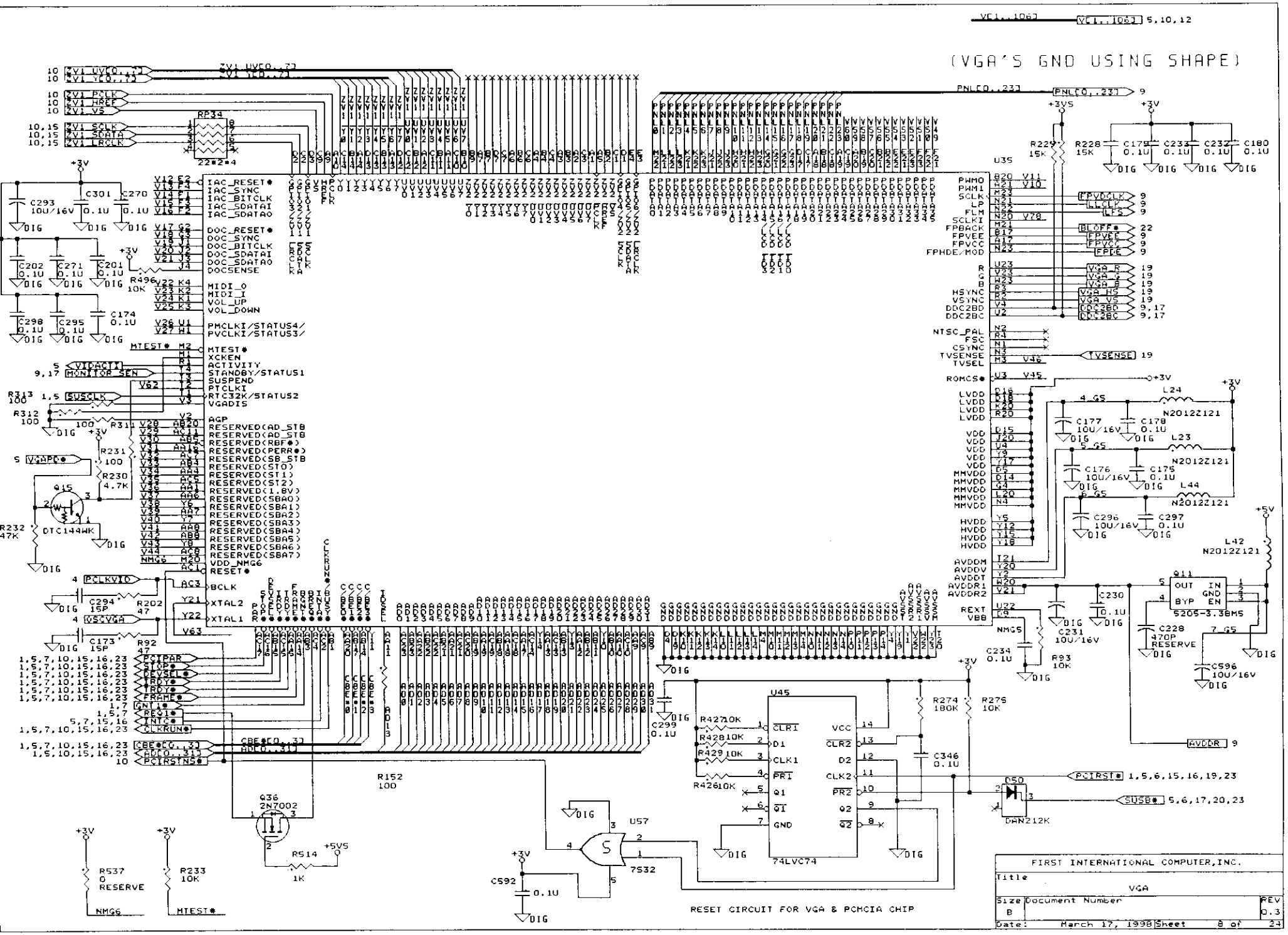
(VGA'S GND USING SHAPE)
U35
U45
74LVC74
U57
7S32
Q36
2N7002
Q15
DTC144WK
Q11
5205-3.3BMS
D50
DAN212K
RP34
22*2*4
RESET CIRCUIT FOR VGA & PCMCIA CHIP
FIRST INTERNATIONAL COMPUTER,INC.
Title
VGA
Size
B
Document Number
REV
0.3
Date: March 17, 1998
Sheet 8 of 24

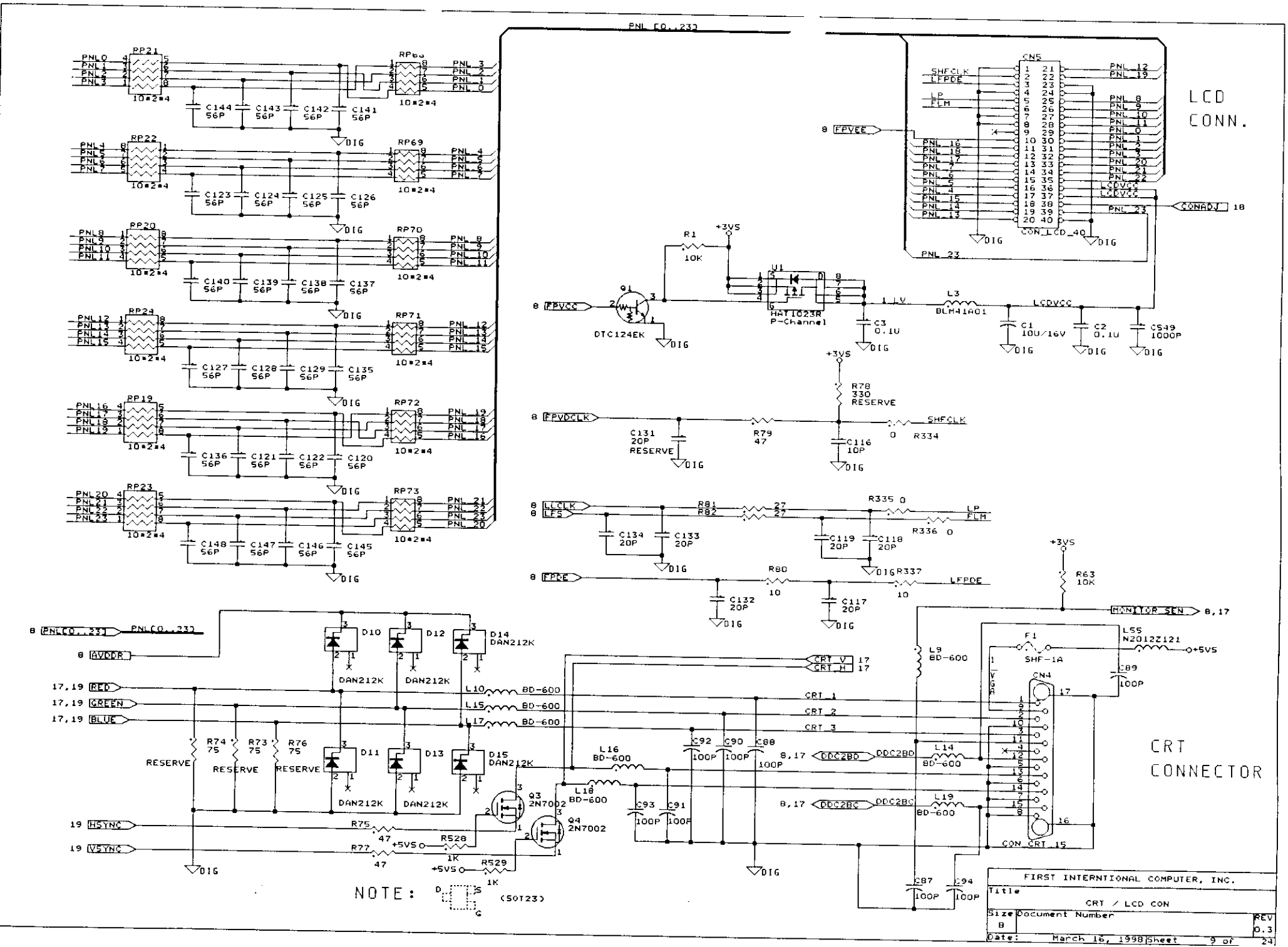
LCD CONN.
CRT CONNECTOR
NOTE:
FIRST INTERNTIONAL COMPUTER, INC.
Title
CRT / LCD CON
Size B
Document Number
REV 0.3
Date: March 16, 1998
Sheet 9 of 24

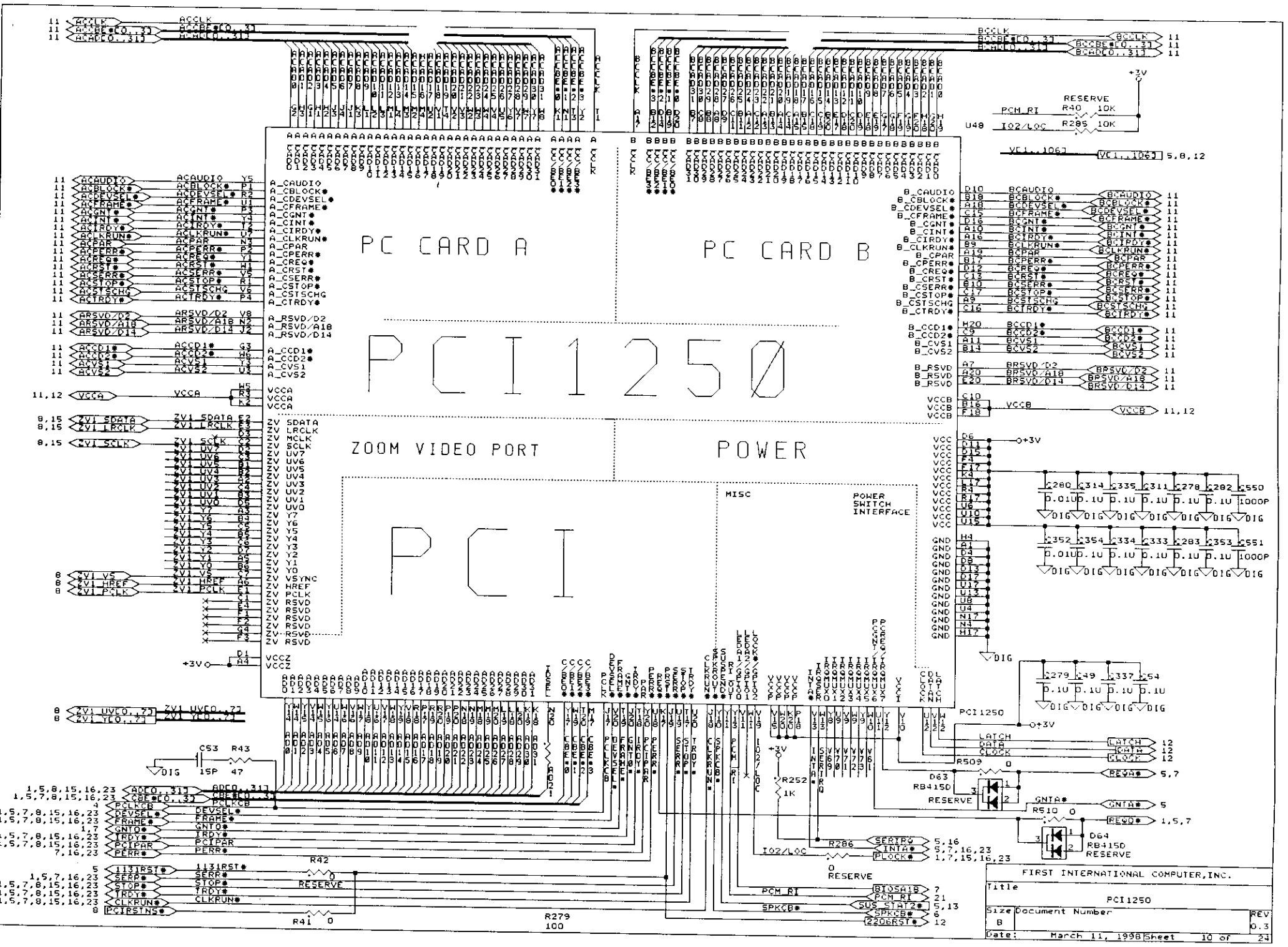
PC CARD A
PC CARD B
PCI1250
ZOOM VIDEO PORT
POWER
PCI
MISC
POWER SWITCH INTERFACE
FIRST INTERNATIONAL COMPUTER,INC.
Title
PCI1250
Size B
Document Number
REV 0.3
Date: March 11, 1998
Sheet 10 of 24

CARD A CONNECTOR

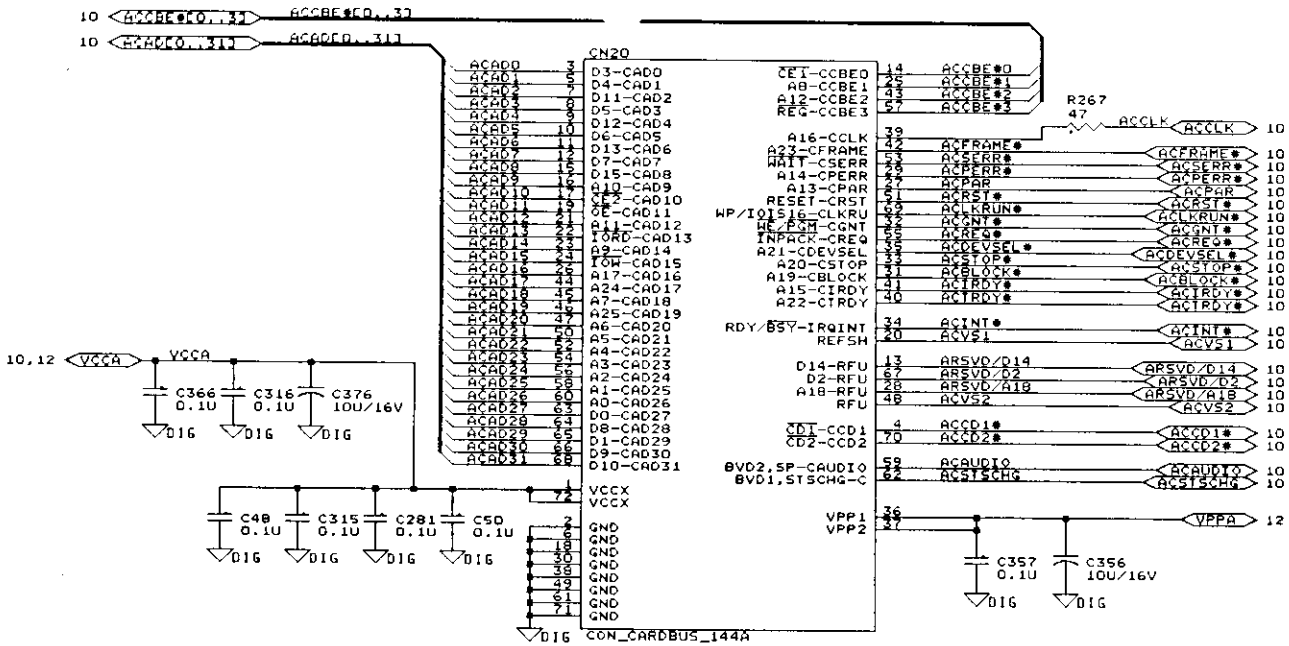

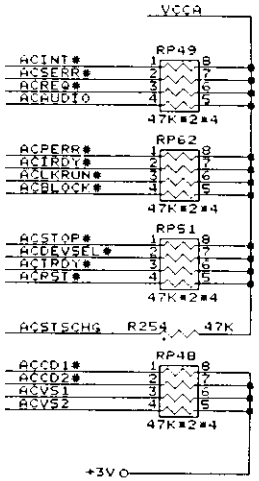

Host Resistors Pull-Ups

Cardbus & 16-bit PC Card Requiered Pull-Ups

Cardbus & 16-bit PC Card Pull-Ups

See Note 2 on Page 136 PC Card Standard Electrical Specification

CARD B CONNECTOR

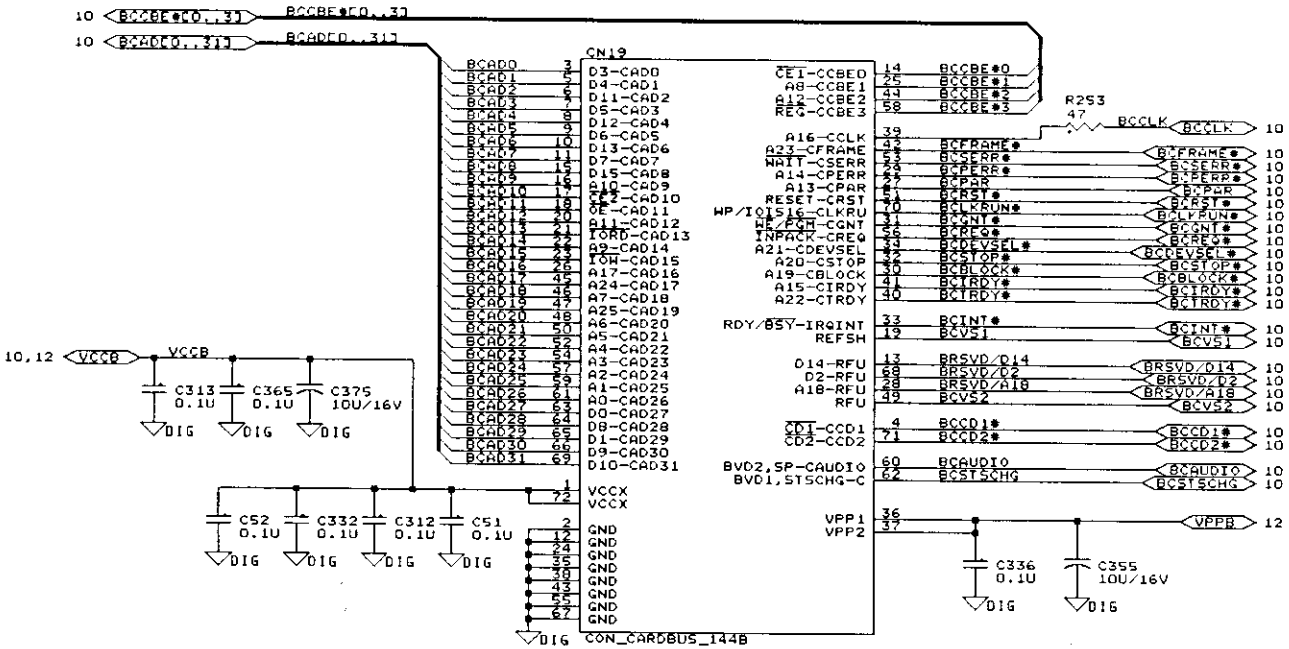

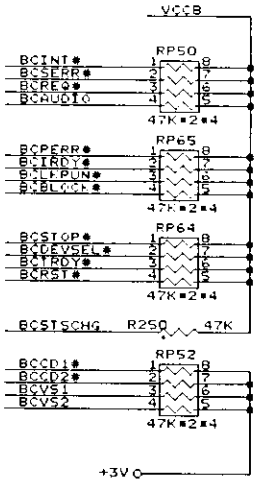

Host Resistors Pull-Ups

Cardbus & 16-bit PC Card Requiered Pull-Ups

Cardbus & 16-bit PC Card Pull-Ups

See Note 2 on Page 136 PC Card Standard Electrical Specification

FIRST INTERNATIONAL COMPUTER,INC.		
Title: CARDBUS SOLUTIONS		
Size: B	Document Number	REV 0.3
Date: February 18, 1998	Sheet 11 of 24	

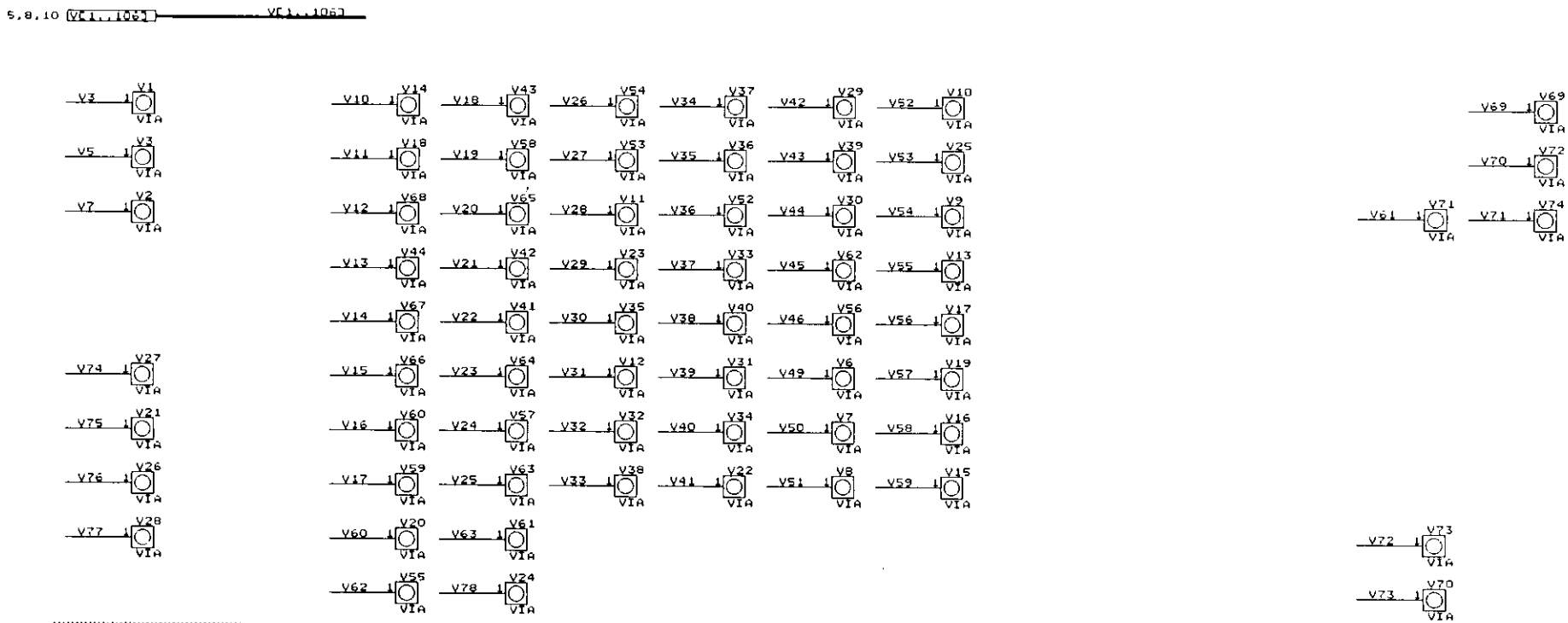

PCMCIA POWER CONTROL

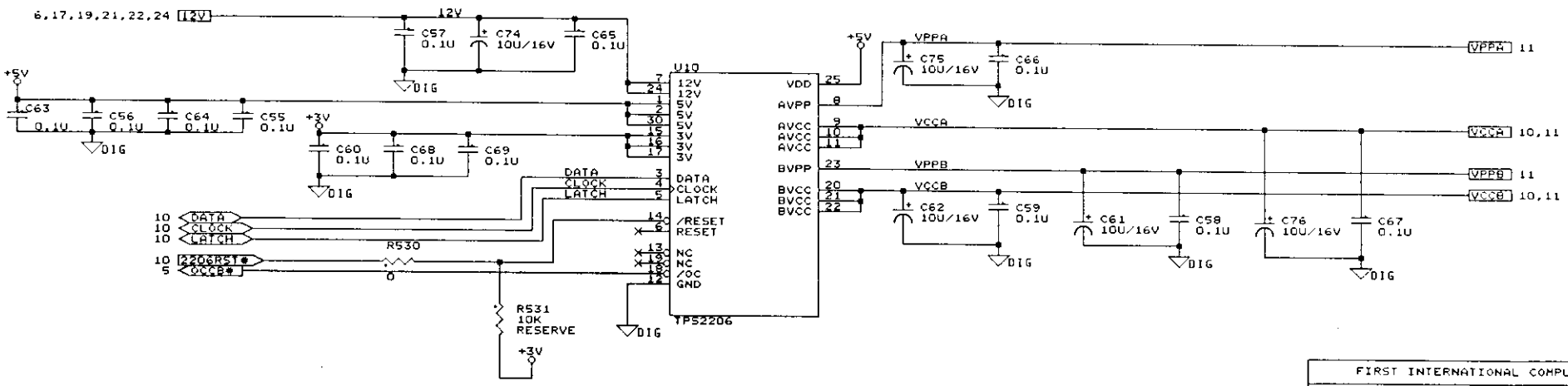

FIRST INTERNATIONAL COMPUTER,INC.		
Title	PCMCIA POWER CONTROL	
Size B	Document Number	REV 0.3
Date: March 16, 1998	Sheet 12 of 24	

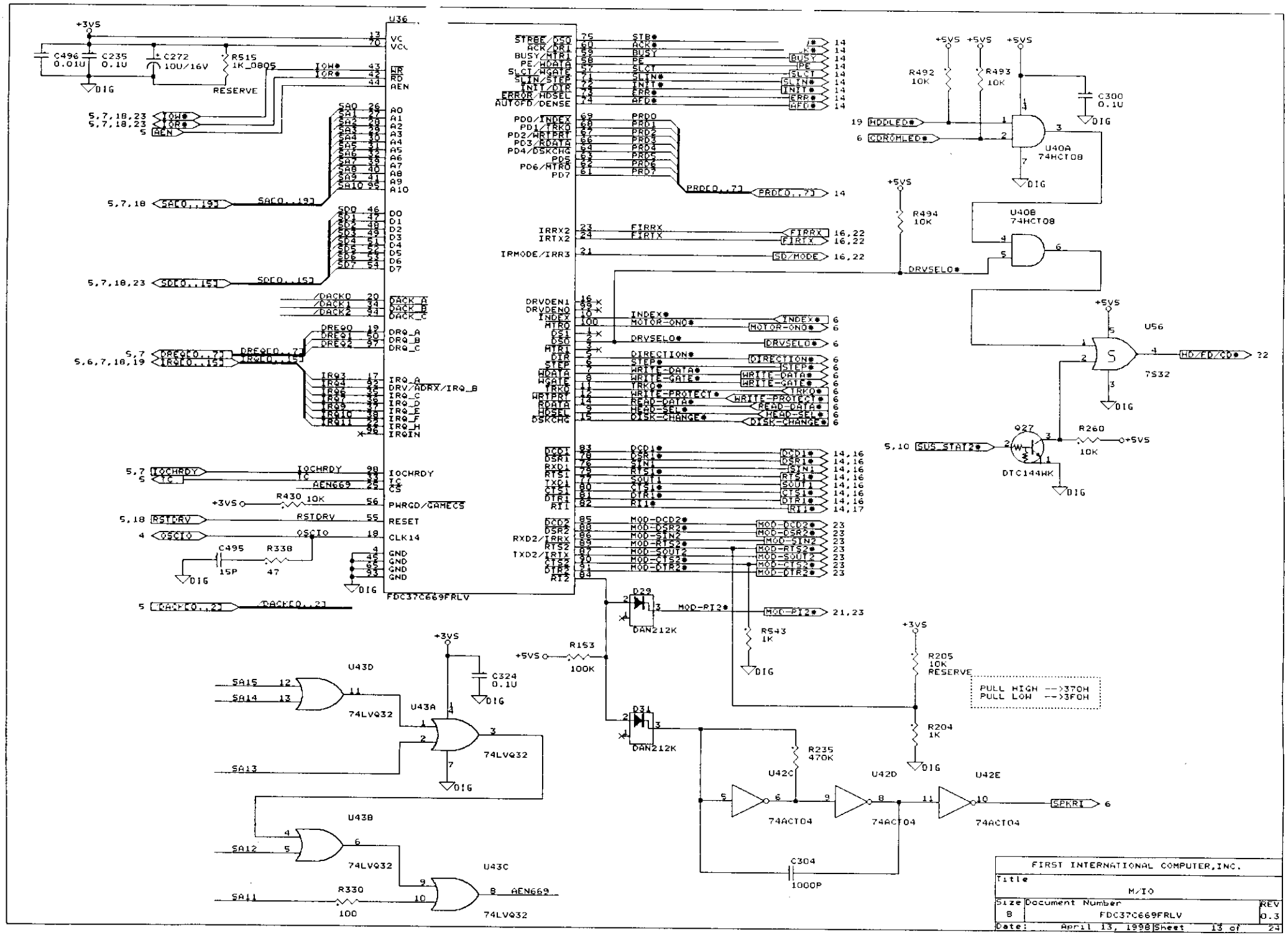
U36
FDC37C669FRLV
C496 0.01U
C235 0.1U
C272 10U/16V
RS15 1K_0805
RESERVE
DIG
+3VS
IOW#
IOR#
AEN
SA0..19
SD0..15
DACK0
DACK1
DACK2
DACK_A
DACK_B
DACK_C
DREQ0
DREQ1
DREQ2
DRQ_A
DRQ_B
DRQ_C
DREQ0..7
IRQ0..15
IRQ3
IRQ4
IRQ5
IRQ6
IRQ7
IRQ9
IRQ10
IRQ11
IRQ_A
DRV/ADRX/IRQ_B
IRQ_C
IRQ_D
IRQ_E
IRQ_F
IRQ_H
IRQIN
IOCHRDY
IC
CS
AEN669
PWRGD/GAMECS
RSTDRV
RESET
OSCIO
CLK14
GND
DACK0..2
R430 10K
C495 15P
R338 47
STRBE/DS0
ACK/DR1
BUSY/MTR1
PE/HDATA
SLCT/WGATE
SLIN/STEP
INIT/DIR
ERROR/HDSEL
AUTOFD/DENSE
PD0/INDEX
PD1/TRK0
PD2/WRTPRT
PD3/RDATA
PD4/DSKCHG
PD5
PD6/MTR0
PD7
PRD0..7
IRRX2
IRTX2
IRMODE/IRR3
FIRRX
FIRTX
SD/MODE
DRVDEN1
DRVDEN0
INDEX
MTR0
DS1
DS0
MTR1
DIR
STEP
WDATA
WGATE
TRK0
WRTPRT
RDATA
HDSEL
DSKCHG
INDEX#
MOTOR-ON0#
DRVSELO#
DIRECTION#
STEP#
WRITE-DATA#
WRITE-GATE#
TRK0#
WRITE-PROTECT#
READ-DATA#
HEAD-SEL#
DISK-CHANGE#
DCD1
DSR1
RXD1
RTS1
TXD1
CTS1
DTR1
RI1
DCD2
DSR2
RXD2/IRRX
RTS2
TXD2/IRTX
CTS2
DTR2
RI2
MOD-DCD2#
MOD-DSR2#
MOD-SIN2
MOD-RTS2#
MOD-SOUT2
MOD-CTS2#
MOD-DTR2#
MOD-RI2#
D29
DAN212K
D31
DAN212K
R543 1K
R153 100K
C324 0.1U
U43D
74LVQ32
U43A
74LVQ32
U43B
74LVQ32
U43C
74LVQ32
R330 100
AEN669
R492 10K
R493 10K
C300 0.1U
HDDLED#
CDROMLED#
U40A 74HCT08
R494 10K
U40B 74HCT08
DRVSELO#
U56
7S32
HD/FD/CD#
Q27
DTC144WK
R260 10K
BUS_STAT2#
R205 10K RESERVE
R204 1K
PULL HIGH -->370H
PULL LOW -->3F0H
R235 470K
U42C
U42D
U42E
74ACT04
C304 1000P
SPKRI
FIRST INTERNATIONAL COMPUTER,INC.
Title
M/IO
Size B
Document Number FDC37C669FRLV
REV 0.3
Date: April 13, 1998
Sheet 13 of 24

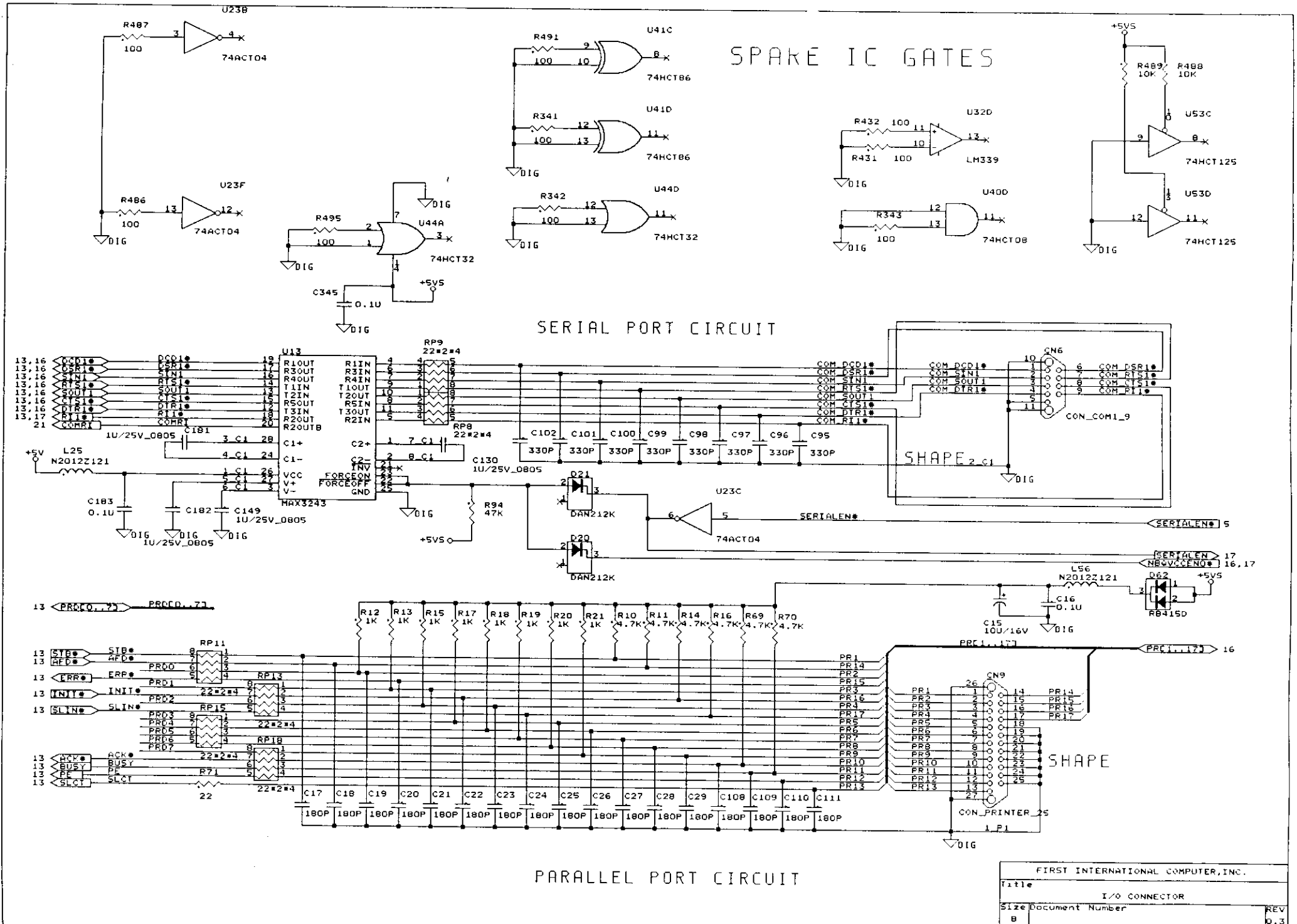
SPAKE IC GATES
SERIAL PORT CIRCUIT
PARALLEL PORT CIRCUIT
U23B
74ACT04
U23F
74ACT04
U41C
74HCT86
U41D
74HCT86
U44A
74HCT32
U44D
74HCT32
U32D
LM339
U40D
74HCT08
U53C
74HCT125
U53D
74HCT125
U13
MAX3243
CN6
CON_COM1_9
CN9
CON_PRINTER_25
U23C
74ACT04
D21
DAN212K
D20
DAN212K
D62
RB415D
SHAPE
SHAPE_2_C1
SERIALEN#
SERIALEN
NBCVCCENO#
PRC1..17
PRC0..7
FIRST INTERNATIONAL COMPUTER,INC.
Title
I/O CONNECTOR
Size B
Document Number
REV 0.3
Date: March 26, 1998
Sheet 14 of 24

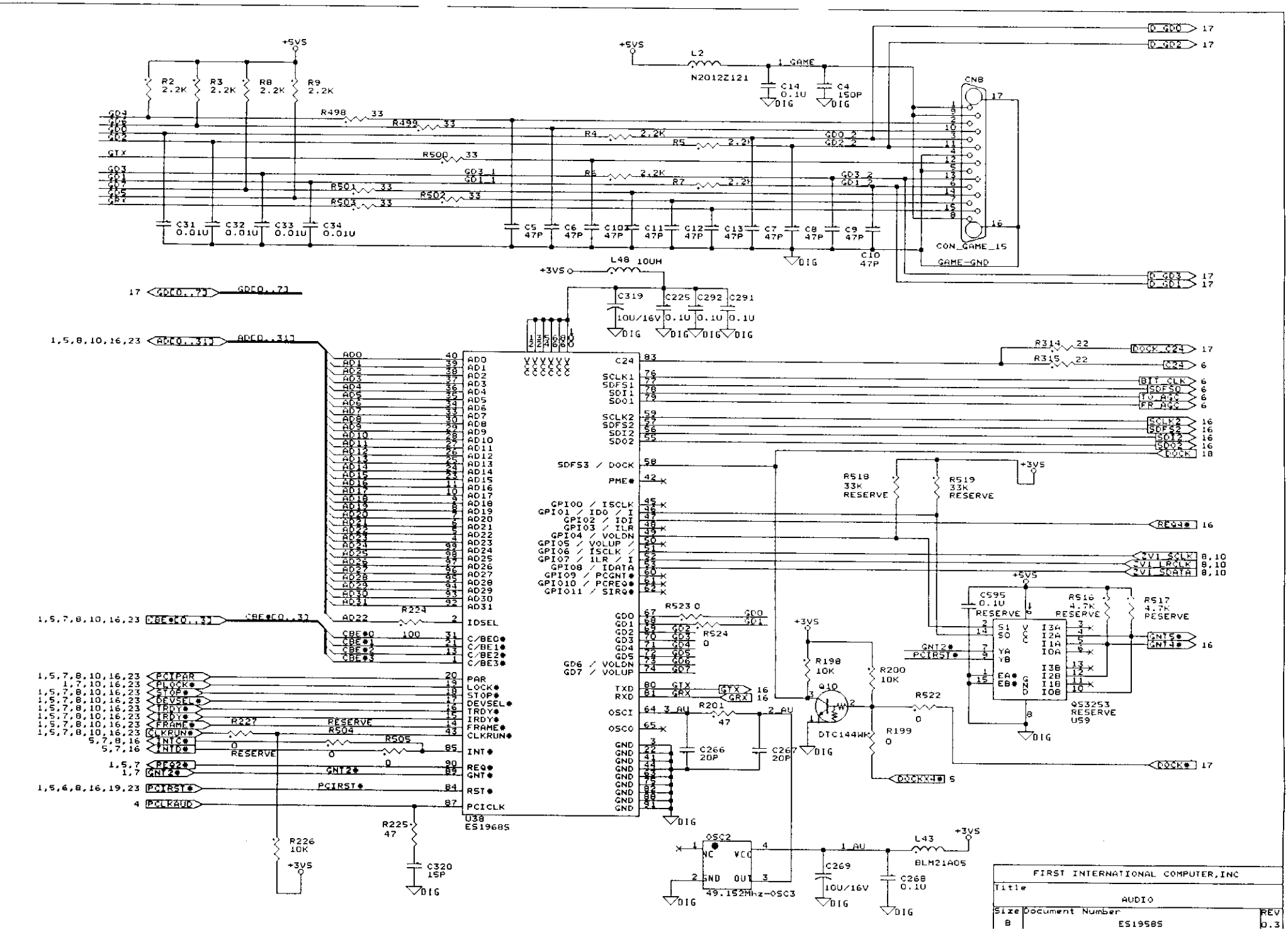
+5VS
R2 2.2K
R3 2.2K
R8 2.2K
R9 2.2K
R498 33
R499 33
R500 33
R501 33
R502 33
R503 33
R4 2.2K
R5 2.2K
R6 2.2K
R7 2.2K
GD0_2
GD2_2
GD3_1
GD1_1
GD3_2
GD1_2
C31 0.01U
C32 0.01U
C33 0.01U
C34 0.01U
C5 47P
C6 47P
C10 47P
C11 47P
C12 47P
C13 47P
C7 47P
C8 47P
C9 47P
C10 47P
L2
N2012Z121
C14 0.1U
C4 150P
DIG
CN8
CON_GAME_15
GAME-GND
D_GD0
D_GD2
D_GD3
D_GD1
L48 10UH
+3VS
C319 10U/16V
C225 0.1U
C292 0.1U
C291 0.1U
GDC0..7]
ADC0..31]
CBE#C0..3]
PCIPAR
PLOCK#
STOP#
DEVSEL#
TRDY#
IRDY#
FRAME#
CLKRUN#
INTC#
INTD#
REQ2#
GNT2#
PCIRST#
PCLKAUD
R224
R227
RESERVE
R504
R505
R226 10K
R225 47
C320 15P
U38
ES19685
IDSEL
C/BE0#
C/BE1#
C/BE2#
C/BE3#
PAR
LOCK#
STOP#
DEVSEL#
TRDY#
IRDY#
FRAME#
CLKRUN#
INT#
REQ#
GNT#
RST#
PCICLK
SDFS3 / DOCK
PME#
GPI00 / ISCLK
GPI01 / IDO / I
GPI02 / IDI
GPI03 / ILR
GPI04 / VOLDN
GPI05 / VOLUP /
GPI06 / ISCLK /
GPI07 / ILR / I
GPI08 / IDATA
GPI09 / PCGNT#
GPI010 / PCREQ#
GPI011 / SIRQ#
GD6 / VOLDN
GD7 / VOLUP
TXD
RXD
OSCI
OSCO
R523 0
R524 0
R201 47
C266 20P
C267 20P
R314 22
R315 22
DOCK_C24
C24
BIT_CLK
SDFS0
TO_AGC
FR_AGC
SCLK2
SDFS2
SDI2
SDO2
DOCK
R518 33K RESERVE
R519 33K RESERVE
REQ4#
VI_SCLK
VI_LRCLK
VI_SDATA
C595 0.1U RESERVE
R516 4.7K RESERVE
R517 4.7K RESERVE
GNT5#
GNT3#
QS3253 RESERVE U59
R198 10K
R200 10K
Q10
DTC144WK
R199 0
R522 0
DOCKXH#
DOCK#
OSC2
49.152Mhz-OSC3
C269 10U/16V
C268 0.1U
L43 BLM21A05
FIRST INTERNATIONAL COMPUTER,INC
Title
AUDIO
Size B
Document Number ES19685
REV 0.3

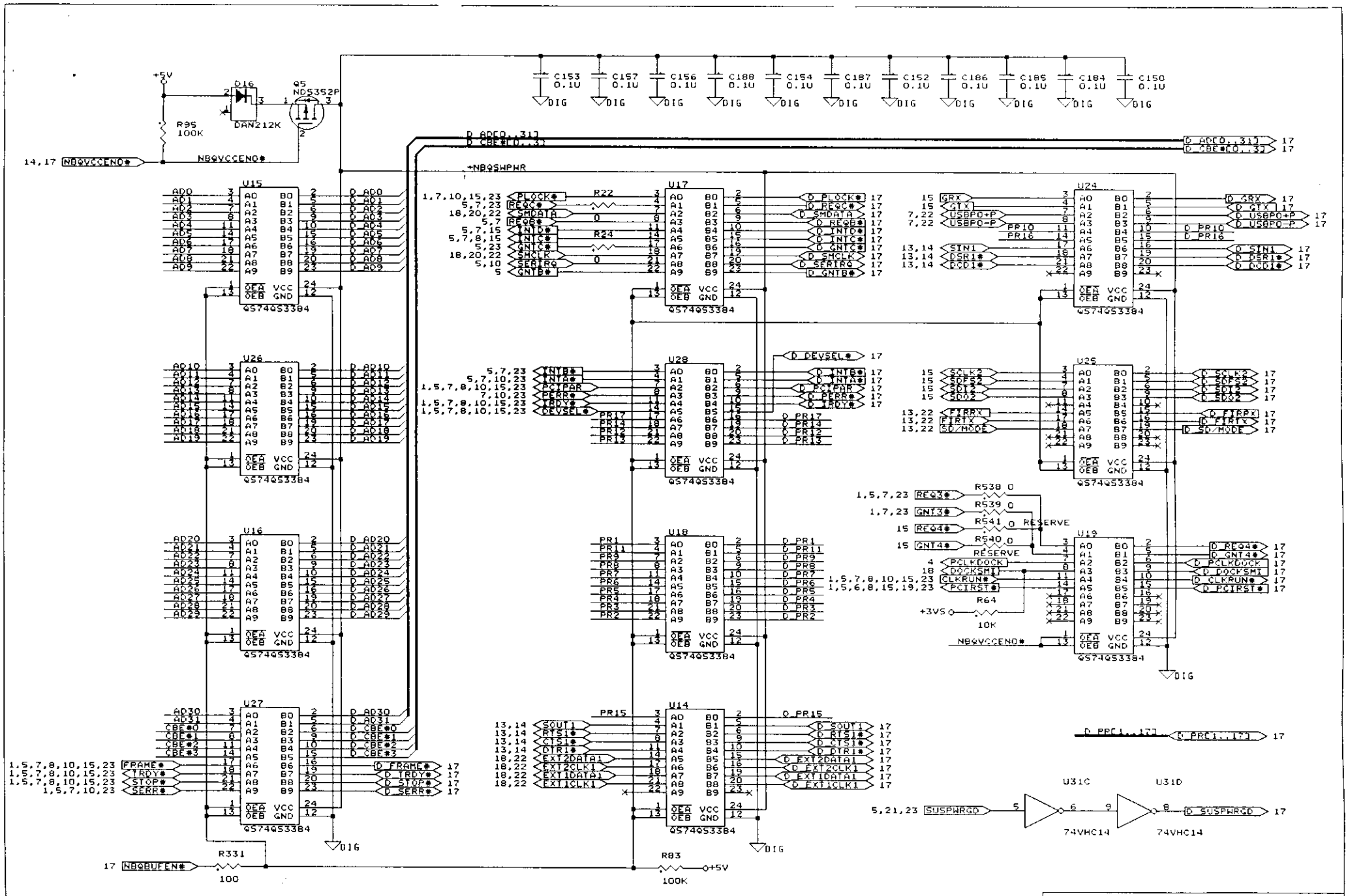
+5V
D16
DAN212K
Q5
NDS352P
R95
100K
14,17 NB9VCCENO#
NB9VCCENO#
C153 0.1U
C157 0.1U
C156 0.1U
C188 0.1U
C154 0.1U
C187 0.1U
C152 0.1U
C186 0.1U
C185 0.1U
C184 0.1U
C150 0.1U
DIG
D_AD[0..31]
D_CBE#[0..3]
+NB9SHPHR
U15
U16
U17
U18
U14
U24
U25
U26
U27
U28
U19
QS74QS3384
R22
R24
R538 0
R539 0
R541 0
R540 0
RESERVE
R64
10K
U31C
U31D
74VHC14
5,21,23 SUSPWRGD
D_SUSPWRGD
D_PRC1..17]
R331
100
17 NB9BUFEN#
R83
100K
+5V
1,5,8,10,15,23 AD[0..31]
1,5,7,8,10,15,23 CBE#[0..3]
14 PRC1..17]
FIRST INTERNATIONAL COMPUTER,INC.
Title
DOCKING
Size B
Document Number
REV 0.3
Date: March 17, 1998
Sheet 16 of 24

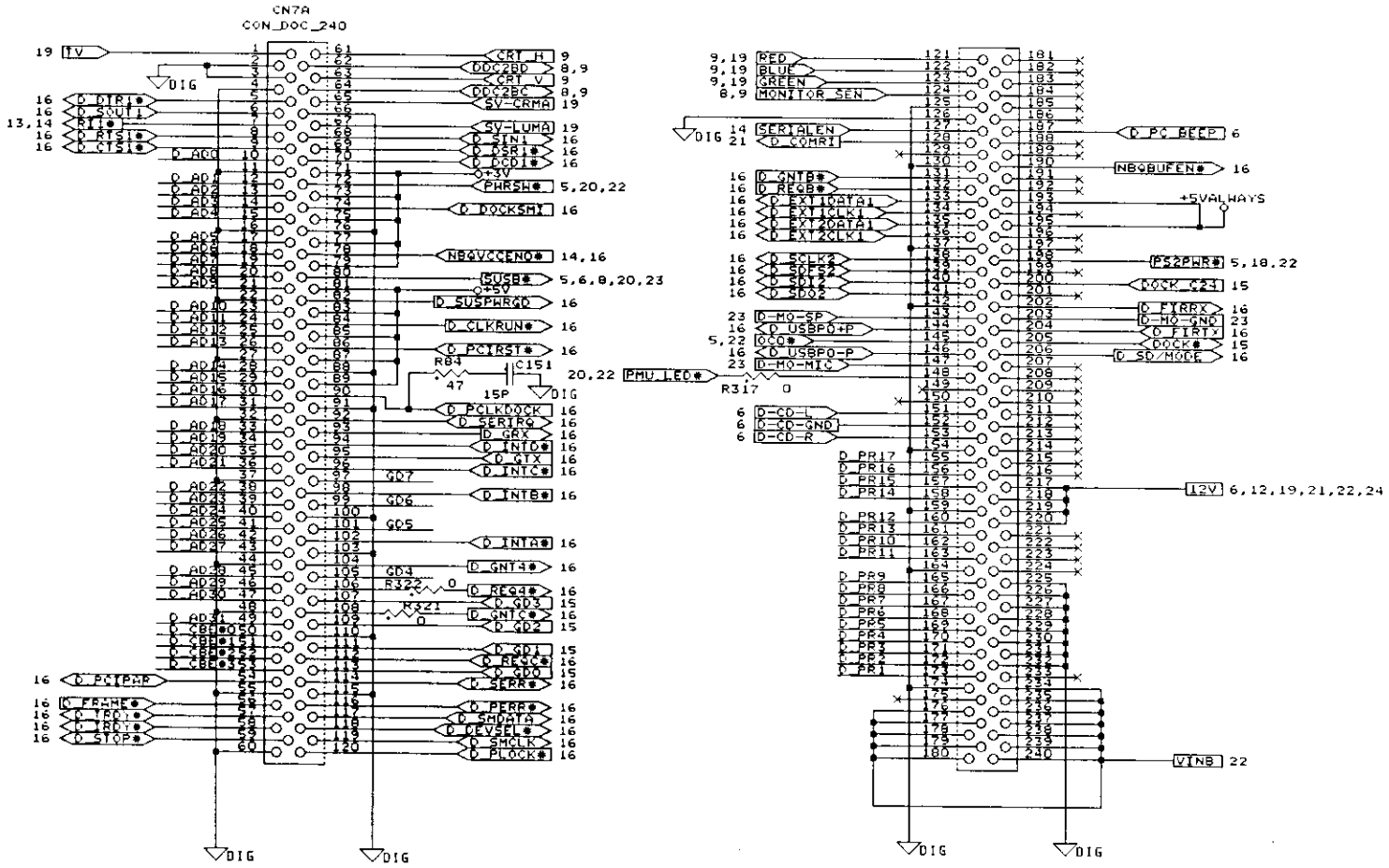

VGA
TV
AUDIO
GAME
PCI
PMU
PS2MOUSE
KEYBOARD
RS232
PRINTER

FIRST INTERNATIONAL COMPUTER,INC.		
Title	DOCKING	
Size B	Document Number	REV 0.3
Date: March 13, 1998	Sheet 17 of 24	

INTERNAL KB CONTROLLOR

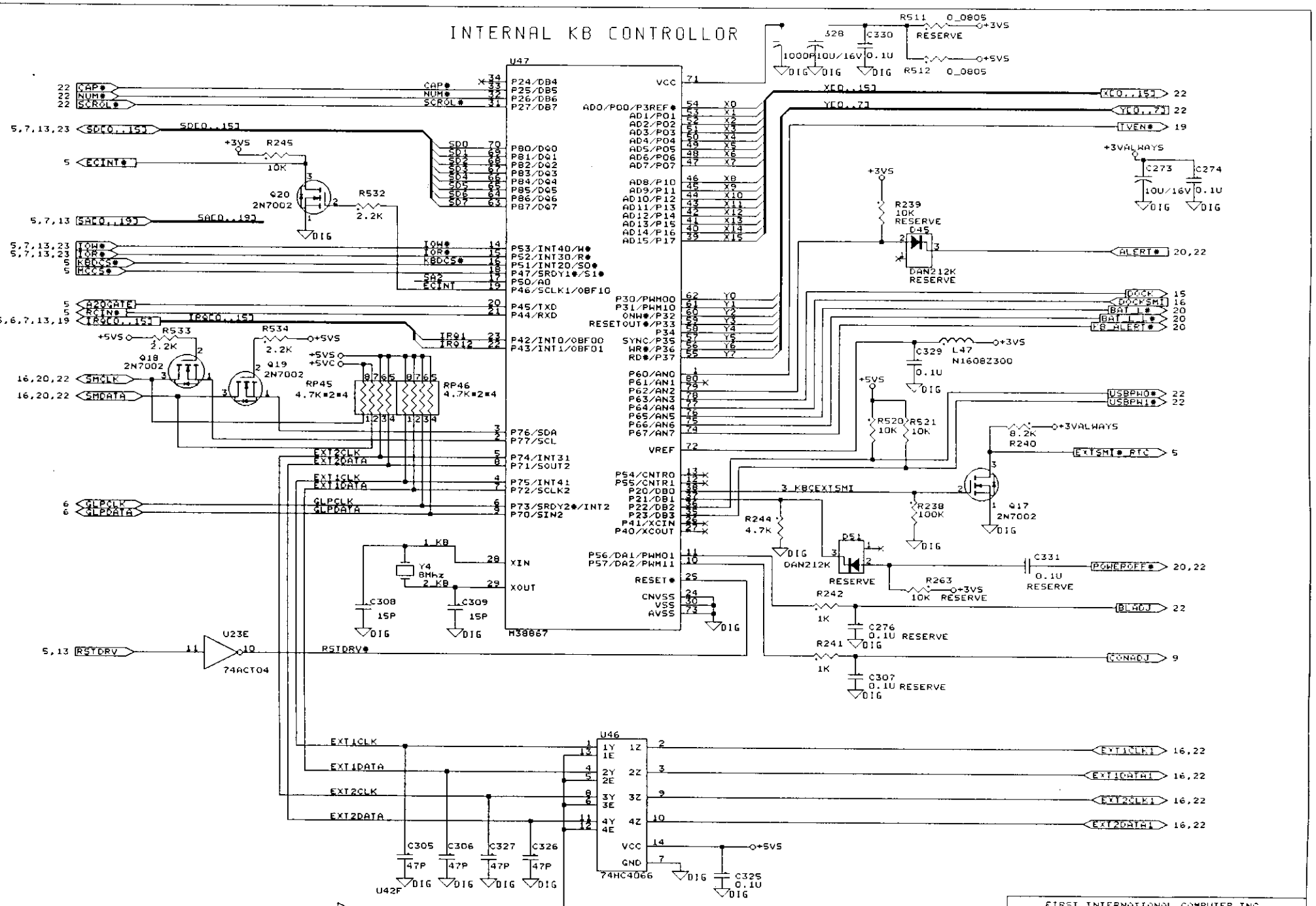

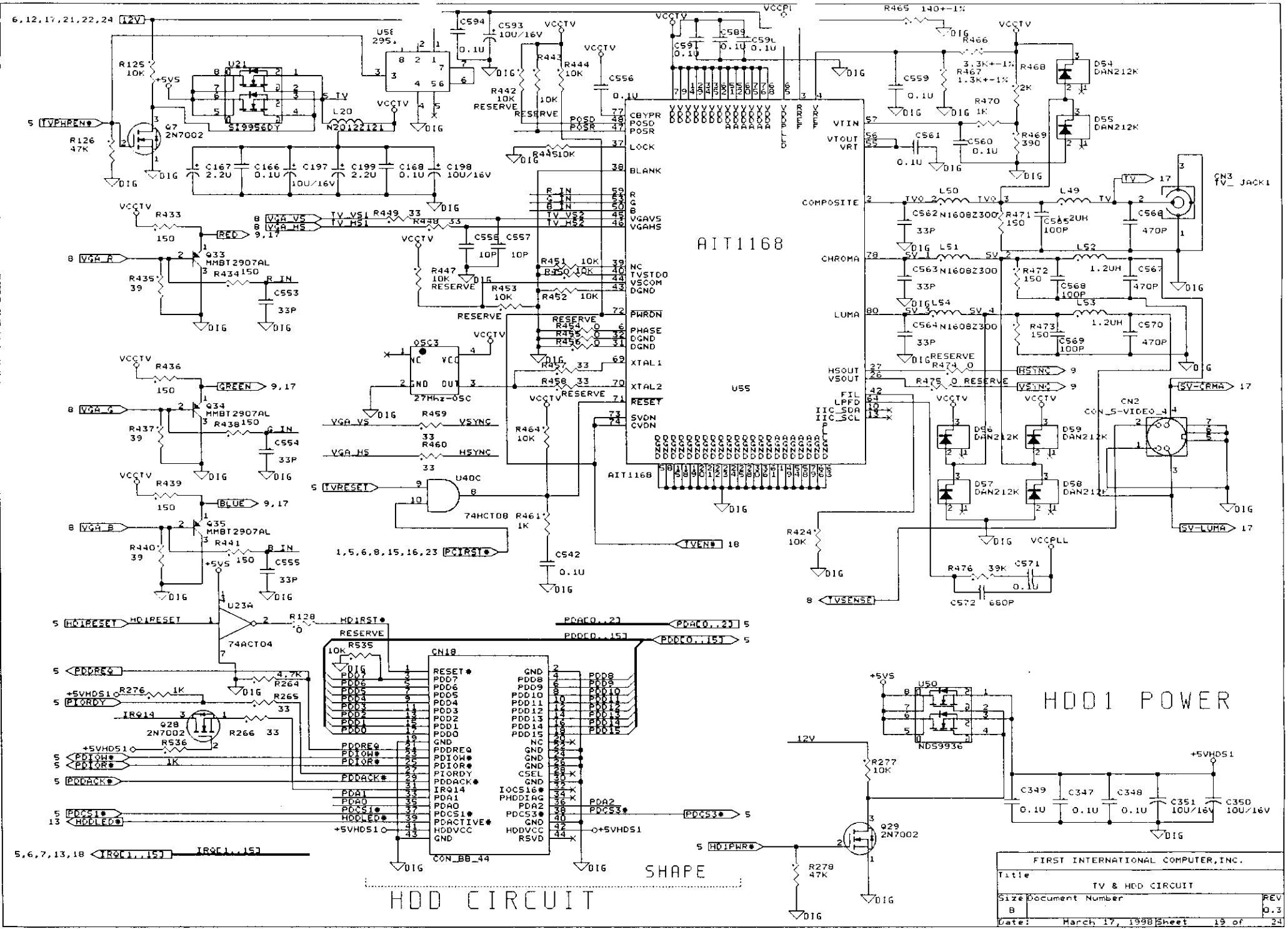
AIT1168
U55
HDD1 POWER
HDD CIRCUIT
SHAPE
CN18
CON_BB_44
U21
SI9956DY
U50
NDS9936
U23A
74ACT04
U40C
74HCT08
Q33
MMBT2907AL
Q34
MMBT2907AL
Q35
MMBT2907AL
Q7
2N7002
Q28
2N7002
Q29
2N7002
OSC3
27MHz-OSC
CN3
TV_ JACK1
CN2
CON_S-VIDEO_4
D54
DAN212K
D55
DAN212K
D56
DAN212K
D57
DAN212K
D58
DAN212K
D59
DAN212K
FIRST INTERNATIONAL COMPUTER,INC.
Title
TV & HDD CIRCUIT
Size
B
Document Number
REV
0.3
Date: March 17, 1998
Sheet 19 of 24

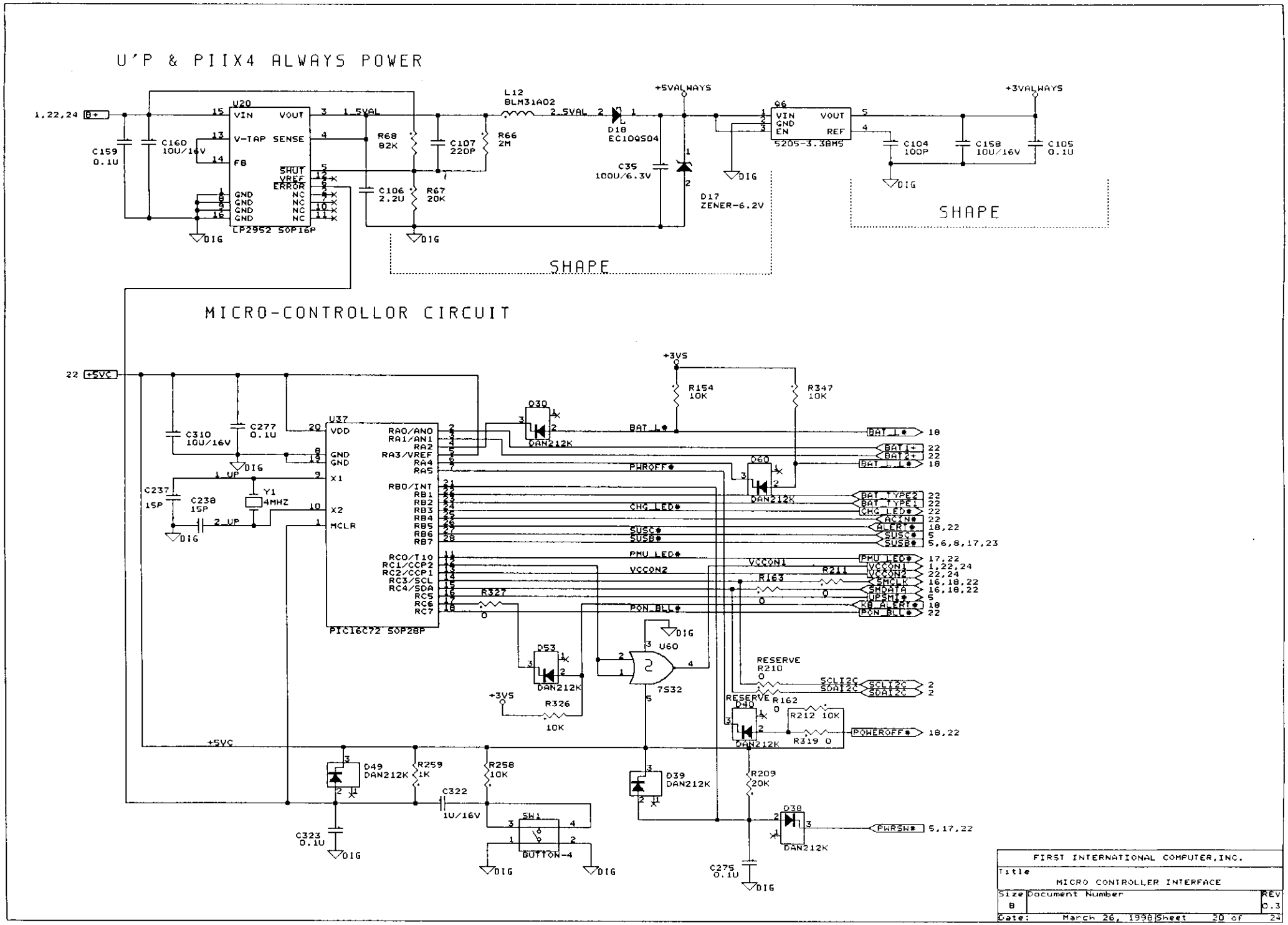
U'P & PIIX4 ALWAYS POWER
MICRO-CONTROLLOR CIRCUIT
U20
LP2952 SOP16P
VIN
VOUT
V-TAP
SENSE
FB
SHUT
VREF
ERROR
GND
NC
1.5VAL
2.5VAL
L12
BLM31A02
D18
EC10QS04
+5VALWAYS
+3VALWAYS
Q6
5205-3.3BMS
VIN
GND
EN
VOUT
REF
C159
0.1U
C160
10U/16V
R68
82K
R67
20K
C106
2.2U
C107
220P
R66
2M
C35
100U/6.3V
D17
ZENER-6.2V
C104
100P
C158
10U/16V
C105
0.1U
DIG
SHAPE
22 +5VC
U37
PIC16C72 SOP28P
VDD
GND
X1
X2
MCLR
RA0/AN0
RA1/AN1
RA2
RA3/VREF
RA4
RA5
RB0/INT
RB1
RB2
RB3
RB4
RB5
RB6
RB7
RC0/T1O
RC1/CCP2
RC2/CCP1
RC3/SCL
RC4/SDA
RC5
RC6
RC7
C310
10U/16V
C277
0.1U
C237
15P
C238
15P
Y1
4MHZ
1 UP
2 UP
+3VS
R154
10K
R347
10K
D30
DAN212K
D60
DAN212K
D53
DAN212K
D40
DAN212K
D38
DAN212K
D49
DAN212K
D39
DAN212K
BAT_L#
PWROFF#
CHG_LED#
SUSC#
SUSB#
PMU_LED#
VCCON2
PON_BLL#
VCCON1
R163
R211
R327
R326
10K
U60
7S32
RESERVE
R210
R162
R212 10K
R319 0
SCLI2C
SDAI2C
POWEROFF#
PWRSW#
R259
1K
R258
10K
C322
1U/16V
SW1
BUTTON-4
C323
0.1U
R209
20K
C275
0.1U
BAT_L#
BAT1+
BAT2+
BAT_L_L#
BAT_TYPE2
BAT_TYPE1
CHG_LED#
ACIN#
ALERT#
SUSC#
SUSB#
PMU_LED#
VCCON1
VCCON2
SMCLK
SMDATA
IUPSMI#
KB_ALERT#
PON_BLL#
SCLI2C
SDAI2C
POWEROFF#
PWRSW#
FIRST INTERNATIONAL COMPUTER,INC.
Title
MICRO CONTROLLER INTERFACE
Size
B
Document Number
REV
0.3
Date: March 26, 1998
Sheet 20 of 24

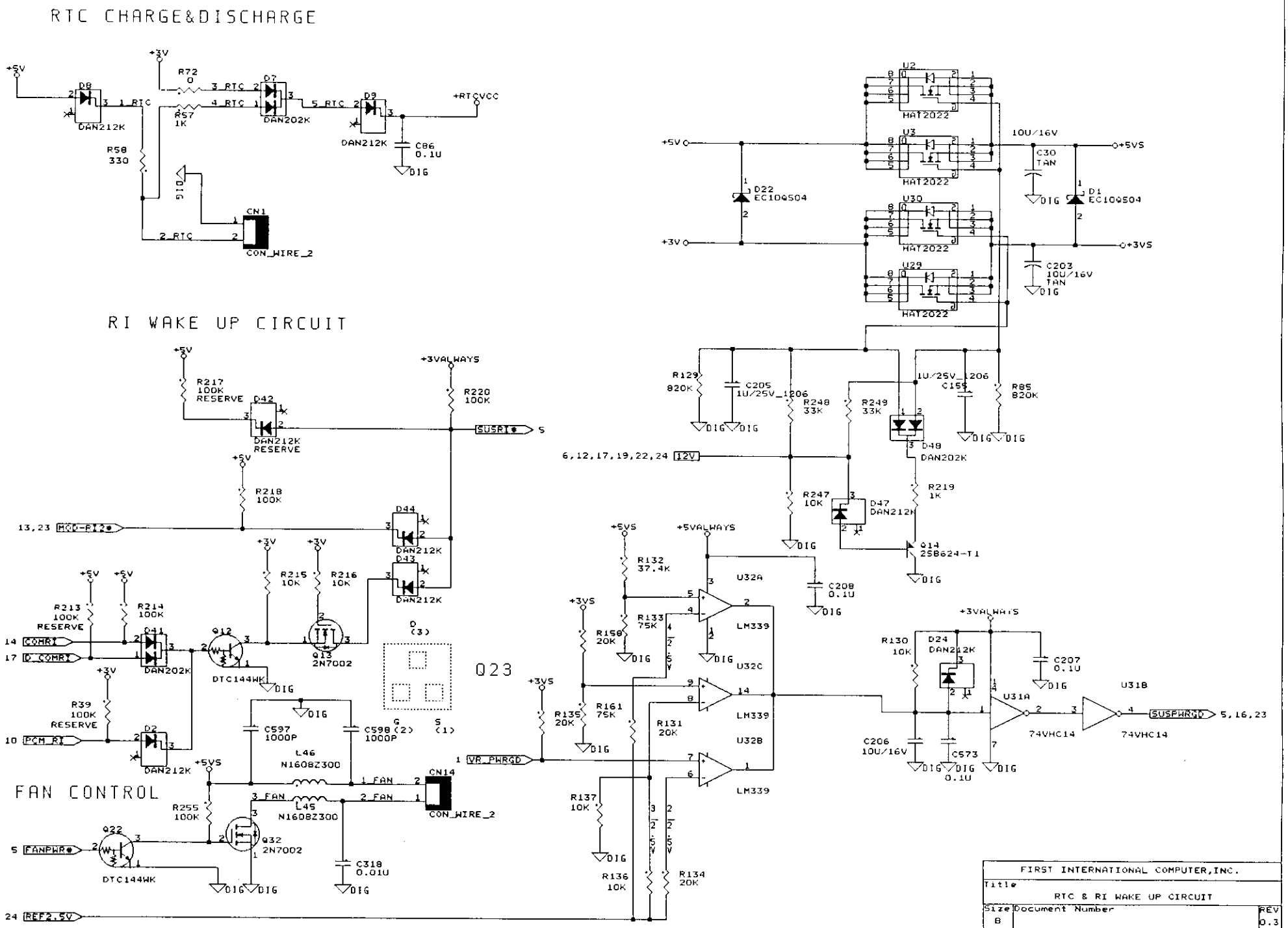
RTC CHARGE&DISCHARGE
RI WAKE UP CIRCUIT
FAN CONTROL
+5V
+3V
R72
0
R57
1K
R58
330
D8
DAN212K
D7
DAN202K
D9
DAN212K
C86
0.1U
DIG
+RTCVCC
CN1
CON_WIRE_2
3_RTC
4_RTC
5_RTC
1_RTC
2_RTC
R217
100K
RESERVE
D42
DAN212K
RESERVE
+3VALWAYS
R220
100K
SUSRI#
S
R218
100K
13,23 MODE-RI2#
D44
DAN212K
D43
DAN212K
R215
10K
R216
10K
Q13
2N7002
R213
100K
RESERVE
R214
100K
14 COMRI
17 D_COMRI
D41
DAN202K
Q12
DTC144WK
R39
100K
RESERVE
10 PCM_RI
D2
DAN212K
C597
1000P
C598
1000P
L46
N16082300
1_FAN
2_FAN
3_FAN
CN14
CON_WIRE_2
R255
100K
Q32
2N7002
5 FANPWR#
DTC144WK
L45
N16082300
C318
0.01U
24 REF2.5V
Q23
D
(3)
G
(2)
S
(1)
U2
U3
U30
U29
HAT2022
10U/16V
C30
TAN
+5VS
+3VS
D22
EC10QS04
D1
EC10QS04
C203
10U/16V
TAN
R129
820K
C205
1U/25V_1206
R248
33K
R249
33K
1U/25V_1206
C155
R85
820K
6,12,17,19,22,24 12V
D48
DAN202K
R247
10K
D47
DAN212K
R219
1K
Q14
2SB624-T1
C208
0.1U
+5VALWAYS
R132
37.4K
R133
75K
R150
20K
U32A
LM339
U32C
U32B
R135
20K
R161
75K
R131
20K
1 VR_PWRGD
R137
10K
R136
10K
R134
20K
R130
10K
D24
DAN212K
C207
0.1U
U31A
74VHC14
U31B
74VHC14
SUSPWRGD 5,16,23
C206
10U/16V
C573
0.1U
FIRST INTERNATIONAL COMPUTER,INC.
Title
RTC & RI WAKE UP CIRCUIT
Size
B
Document Number
REV
0.3
Date: March 26, 1998
Sheet 21 of 24

DC CONVERTER CONNECTOR

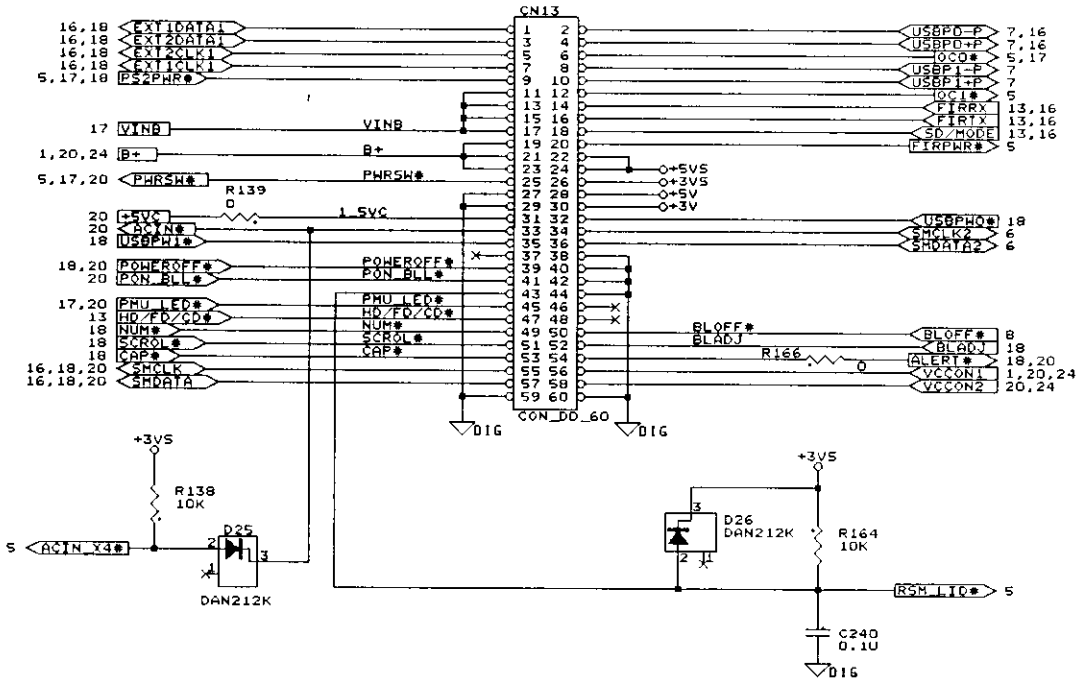

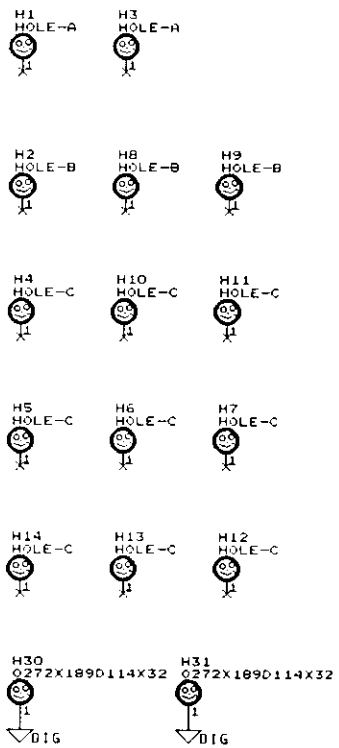

INTERNAL KEYBOARD

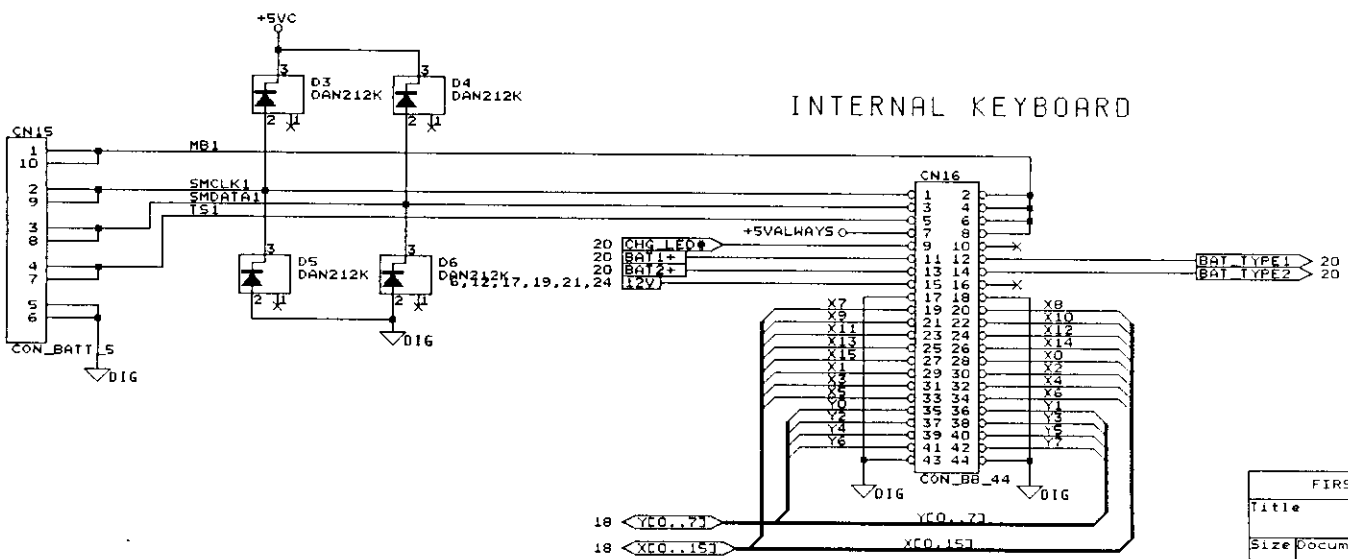

FIRST INTERNATIONAL COMPUTER,INC.		
Title	POWER INTERFACE	
Size B	Document Number	REV 0.3
Date: March 10, 1998	Sheet 22 of 24	

LAN CARD

MODEM CARD

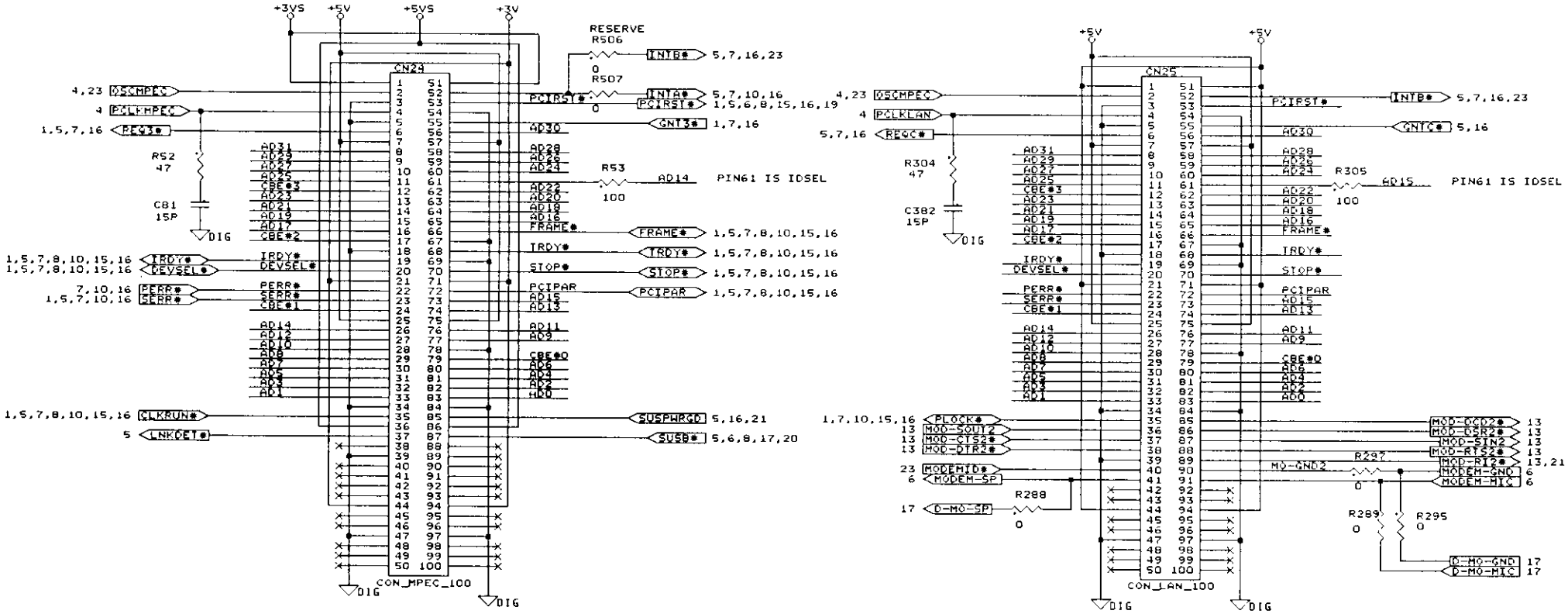

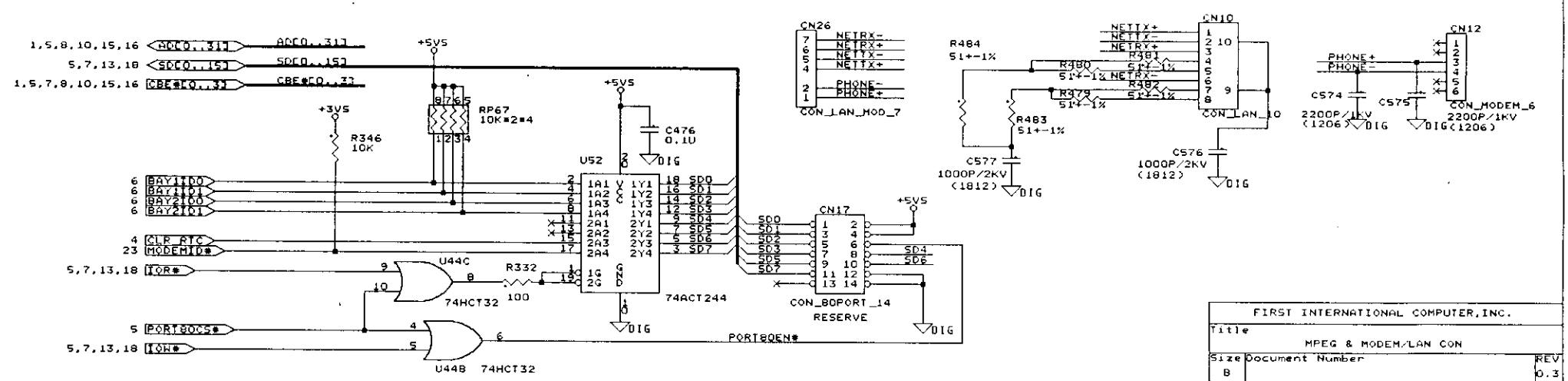

FIRST INTERNATIONAL COMPUTER,INC.		
Title	MPEG & MODEM/LAN CON	
Size B	Document Number	REV 0.3
Date: February 18, 1998	Sheet 23 of 24	

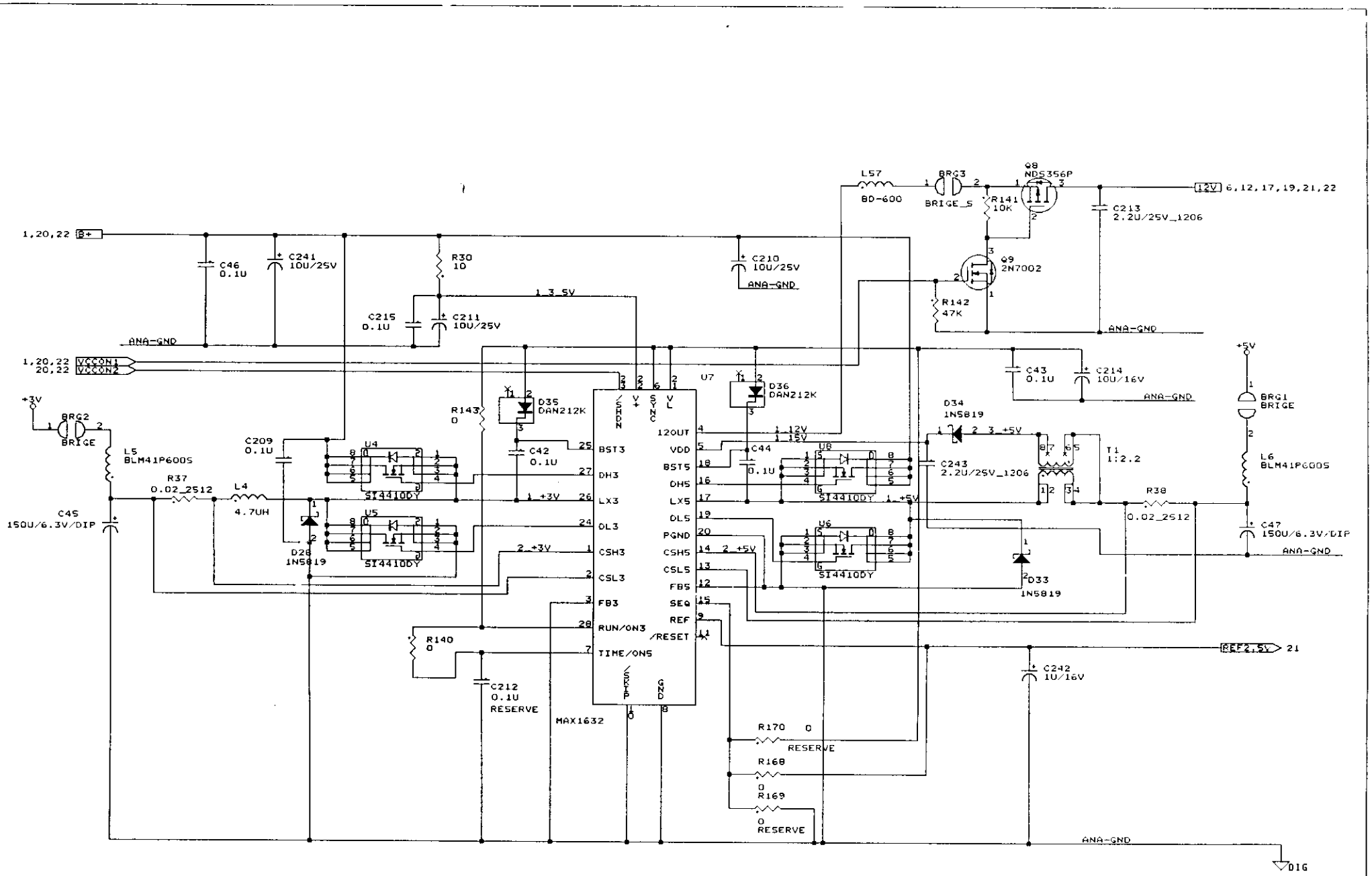

FIRST INTERNATIONAL COMPUTER,INC.		
Title	.DC/DC	
Size B	Document Number	REV 0.3
Date: March 16, 1998	Sheet 24 of 24	