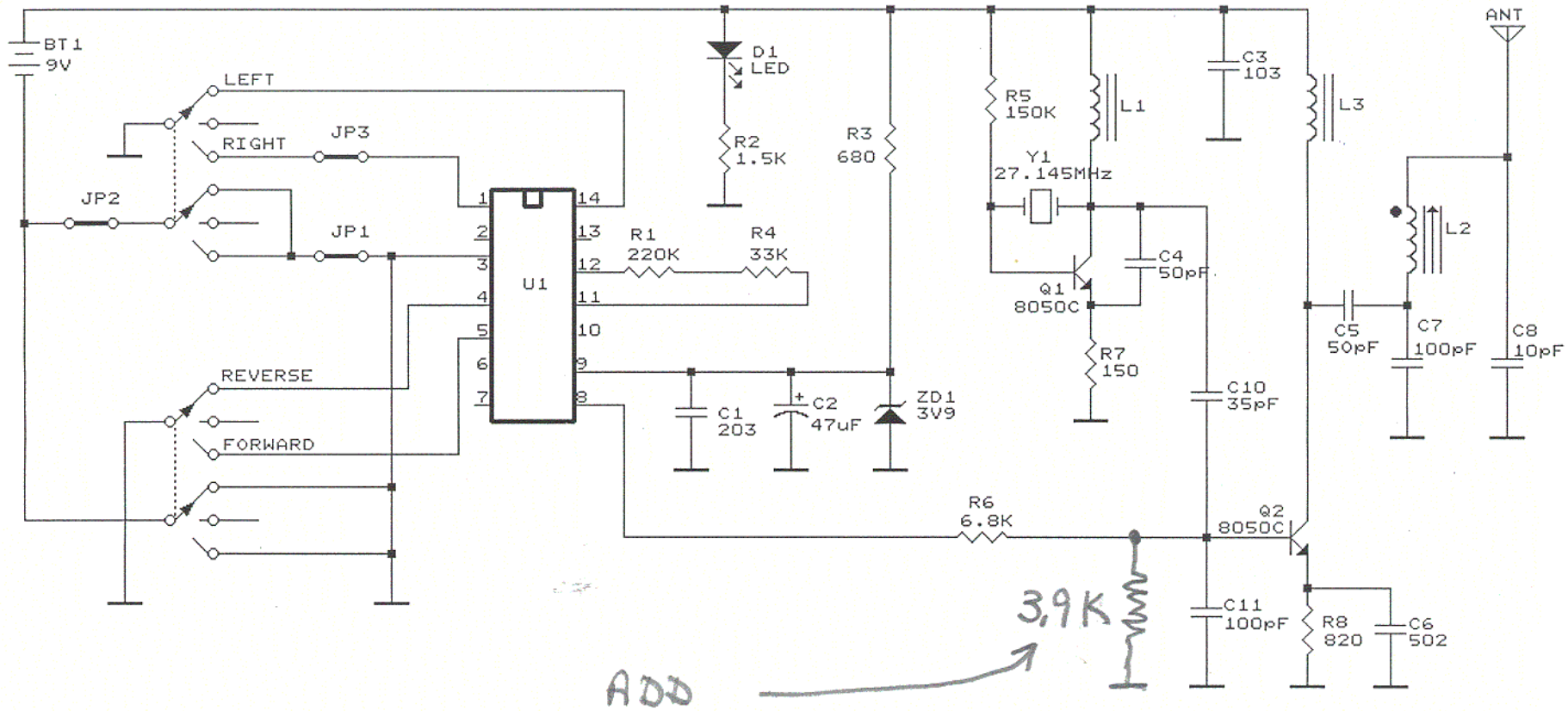

SCIENTIFIC TOYS LTD.
FCC ID : BY3E889
JOB # : 121ZH0

EXHIBIT # : 3

SCIENTIFIC TOYS, LTD.	
Title: 27MHz SCREEN TRANSMITTER	
Item No.: FCC ITEM BY3E889	Date: 25-3-2000
Document No.: REF-E-	Drawn By: DICK
File No.:\FCC\BY3E889	Approved By:
Page Of	