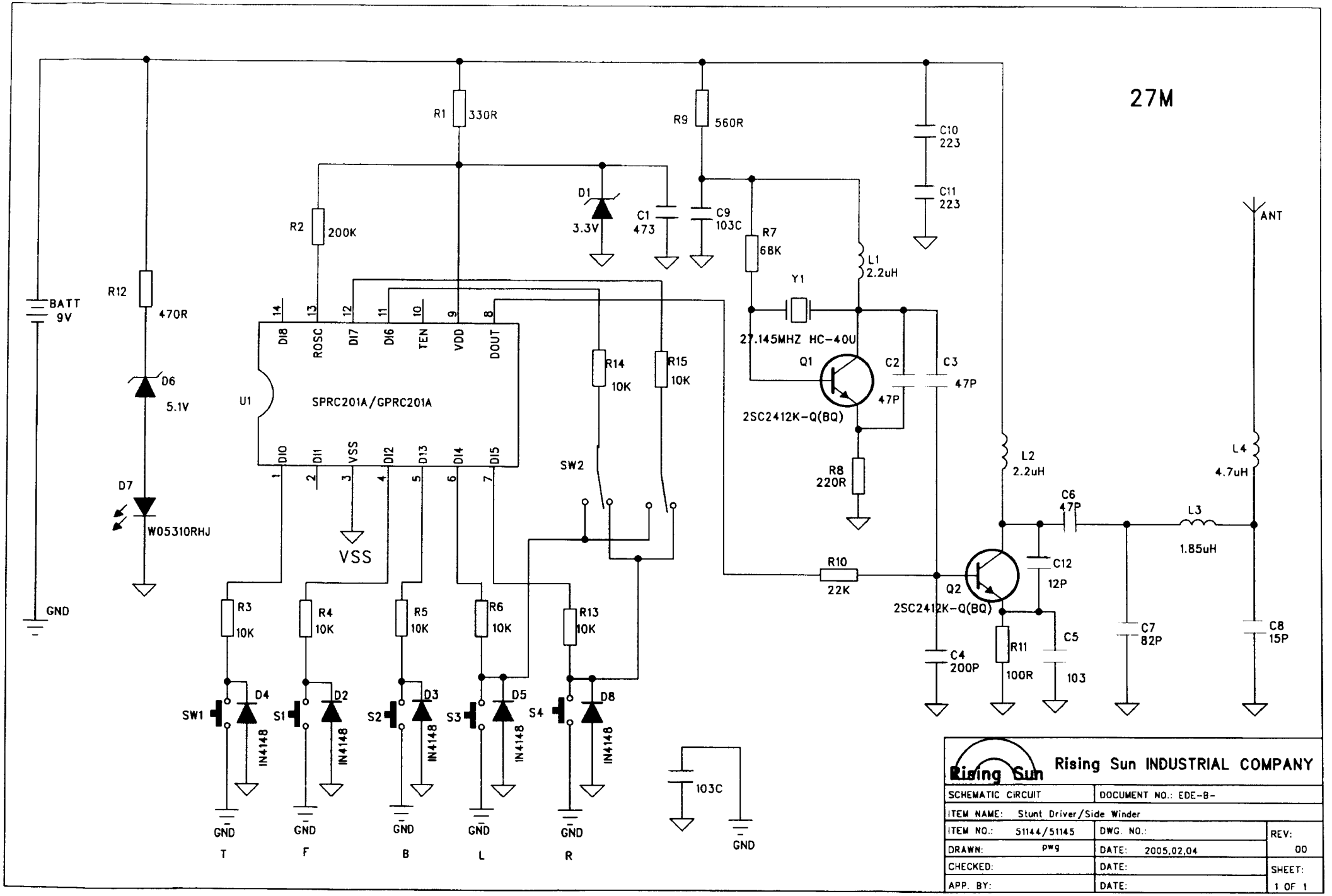
27M
BATT
9V
GND
R12
470R
D6
5.1V
D7
W05310RHJ
R1
330R
R2
200K
D1
3.3V
C1
473
R9
560R
C9
103C
R7
68K
C10
223
C11
223
L1
2.2uH
Y1
27.145MHZ HC-40U
Q1
2SC2412K-Q(BQ)
C2
47P
C3
47P
R8
220R
U1
SPRC201A/GPRC201A
DI8
ROSC
DI7
DI6
TEN
VDD
DOUT
DI0
DI1
VSS
DI2
DI3
DI4
DI5
VSS
R14
10K
R15
10K
SW2
R10
22K
Q2
2SC2412K-Q(BQ)
C12
12P
C5
103
R11
100R
C4
200P
L2
2.2uH
C6
47P
L3
1.85uH
L4
4.7uH
C7
82P
C8
15P
ANT
R3
10K
R4
10K
R5
10K
R6
10K
R13
10K
SW1
S1
S2
S3
S4
D4
D2
D3
D5
D8
IN4148
GND
T
F
B
L
R
103C
Rising Sun
Rising Sun INDUSTRIAL COMPANY
SCHEMATIC CIRCUIT
DOCUMENT NO.: EDE-8-
ITEM NAME: Stunt Driver/Side Winder
ITEM NO.: 51144/51145
DWG. NO.:
REV: 00
DRAWN: pwg
DATE: 2005,02,04
CHECKED:
DATE:
SHEET: 1 OF 1
APP. BY:
DATE: