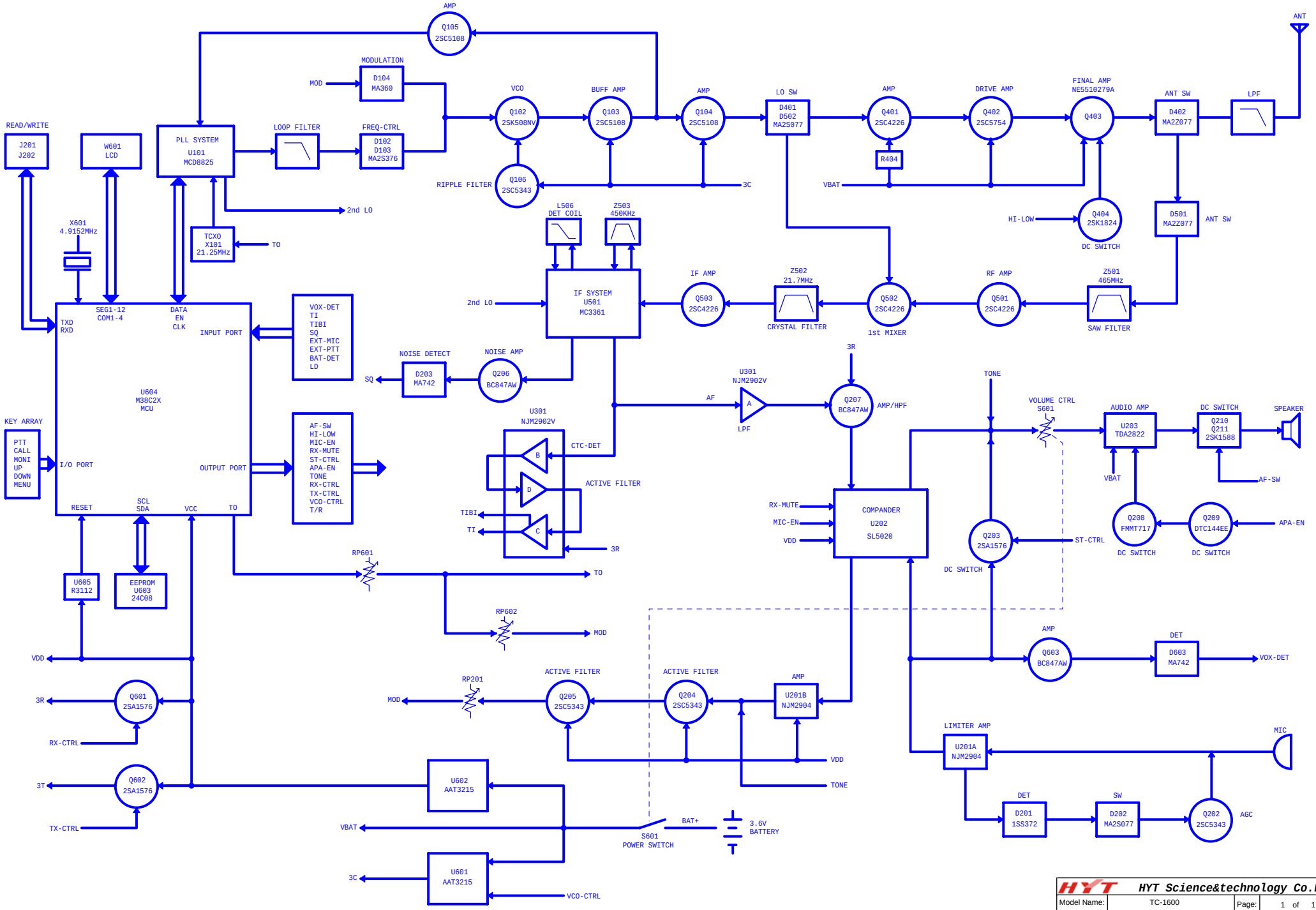

HYT Science&technology Co.Ltd.			
Model Name:	TC-1600	Page:	1 of 1
Part Name:	BLOCK DIAGRAM	Date:	Thursday, June 01, 2006
File No.:	HYT-RD-BLD-CD-	Rev:	1.0
Prepare:	Check:	Approve:	