PAGE	1 OF 1

REVISION RECORD MODIFICATIONS	DATE	REV.
INITIAL ISSUE	2021.12.20	A.0

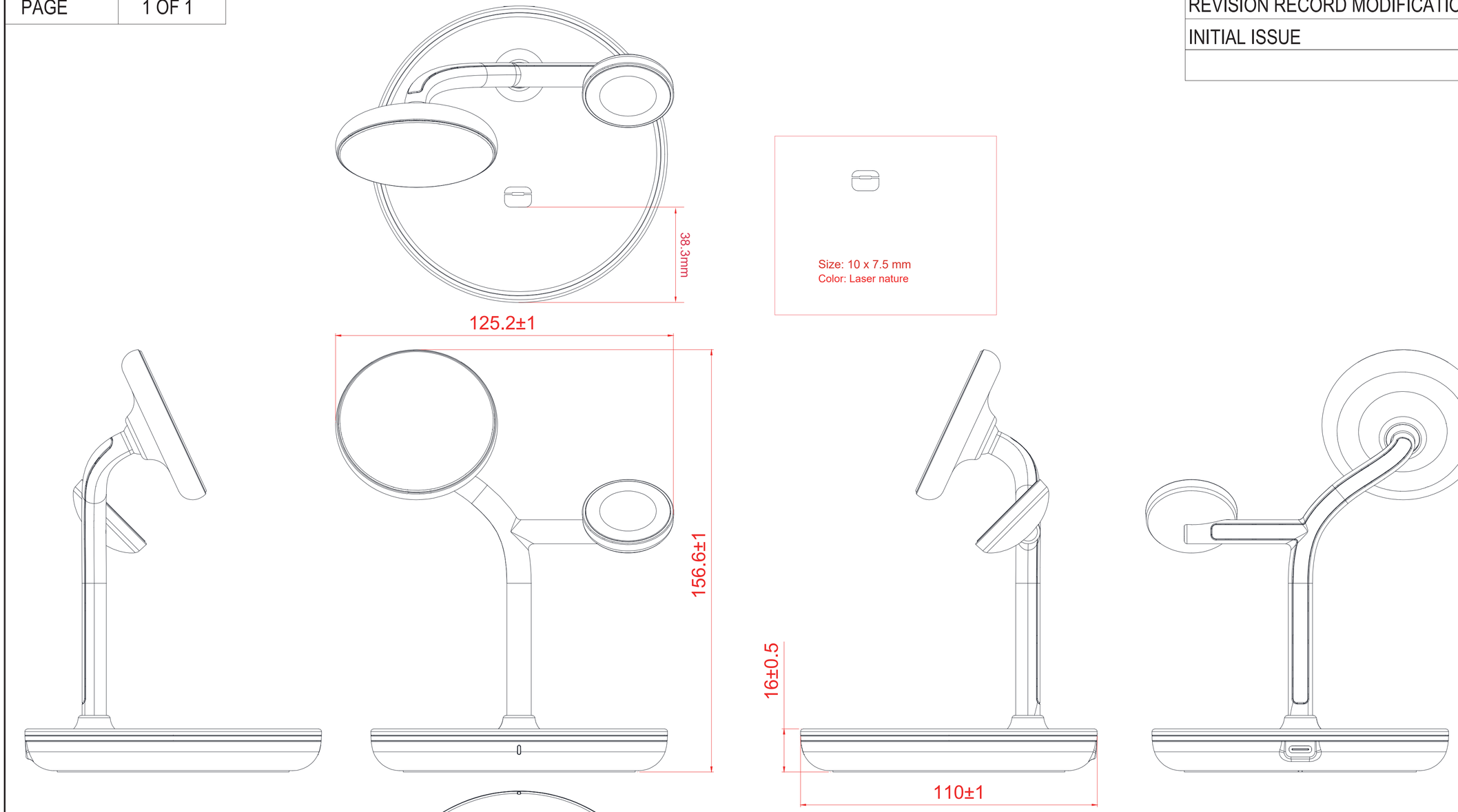

Size: 10 x 7.5 mm
Color: Laser nature

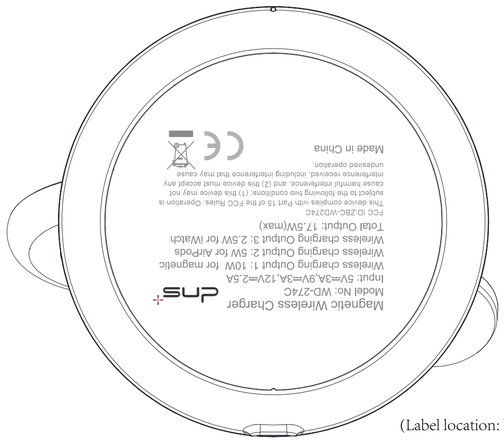

(Label location: bottom of the device)

APPROVED	CHECKED	DRAWN	CUSTOMER:	CM001389
			CUST. P/N.	*******
			DRAW NO.	WD274C***
			UNIT	mm
			SCALE	NONE

DESCRIPTION:

WD274C 3in1 Wireless Charger

SHENZHEN DNS INDUSTRIES CO., LTD.
Add: 23F, building A, Shenzhen International Innovation Center, 1006 Shennan Road, Futian,Shenzhen, China
Tel:+86-755-83401338
Fax:+86-755-83301489
Web:www.dnsinsustries.com