VM928-XHD LABEL
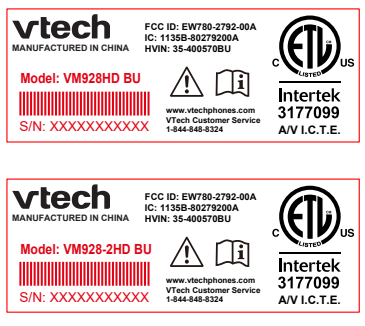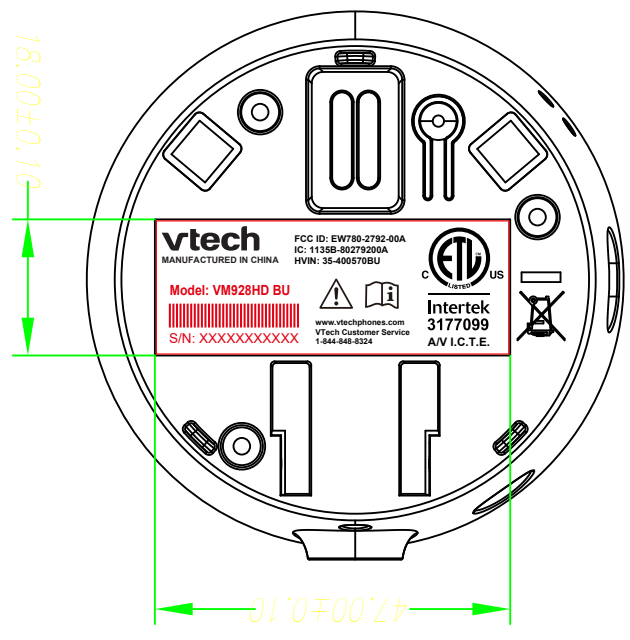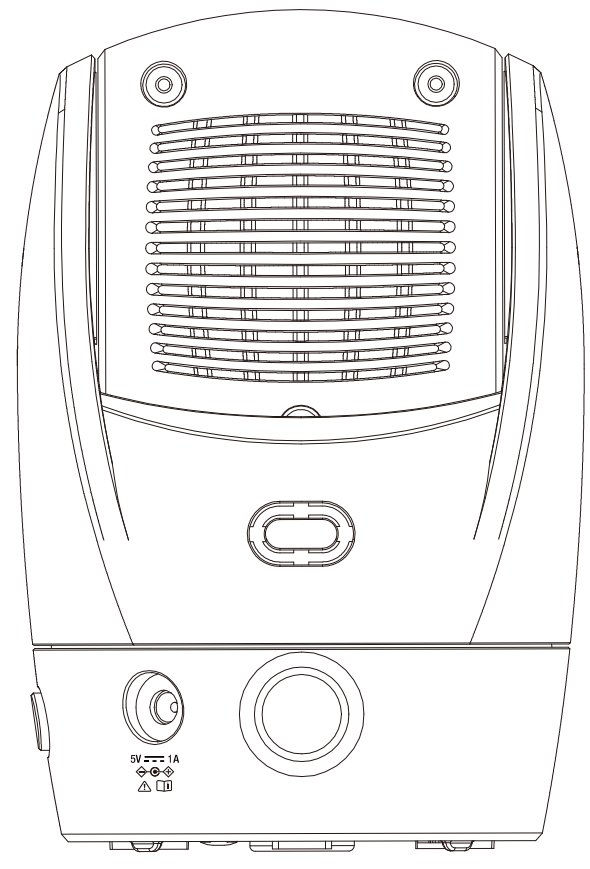
Label
46.6x17.6mm