A3212_A3408_A3409_A3410_System_Block_Diagram

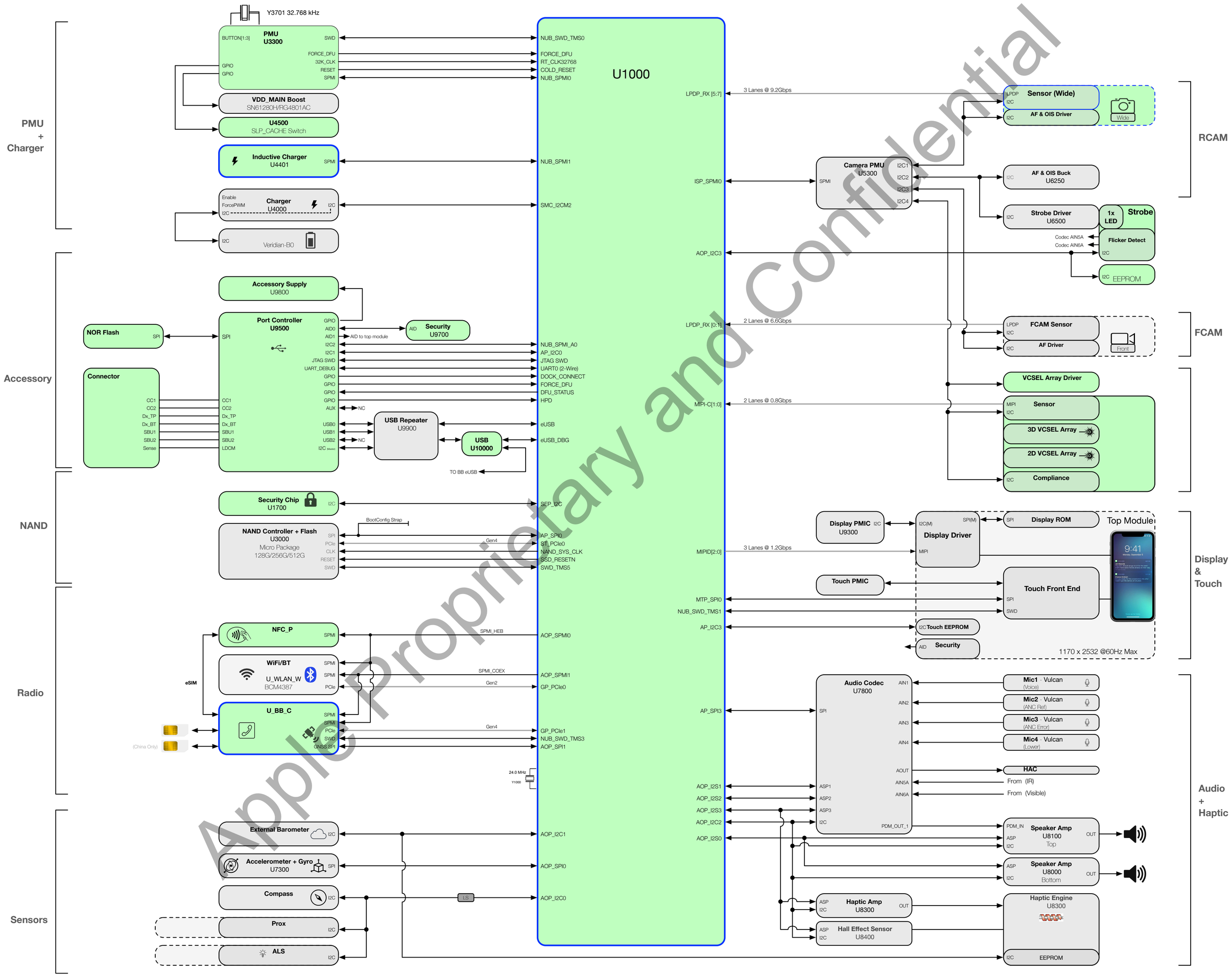

Apple Proprietary and Confidential