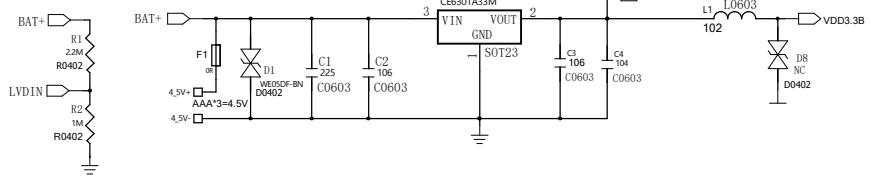

LVD Circuit

MCU Circuit

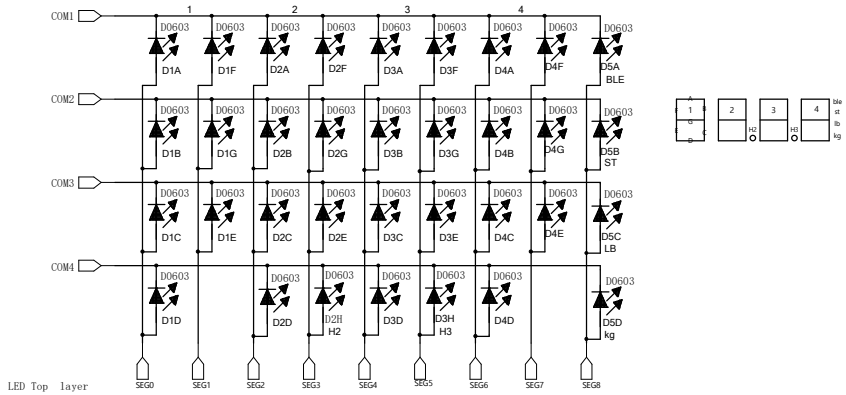

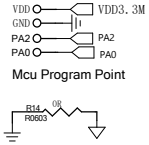

Mcu Program Point

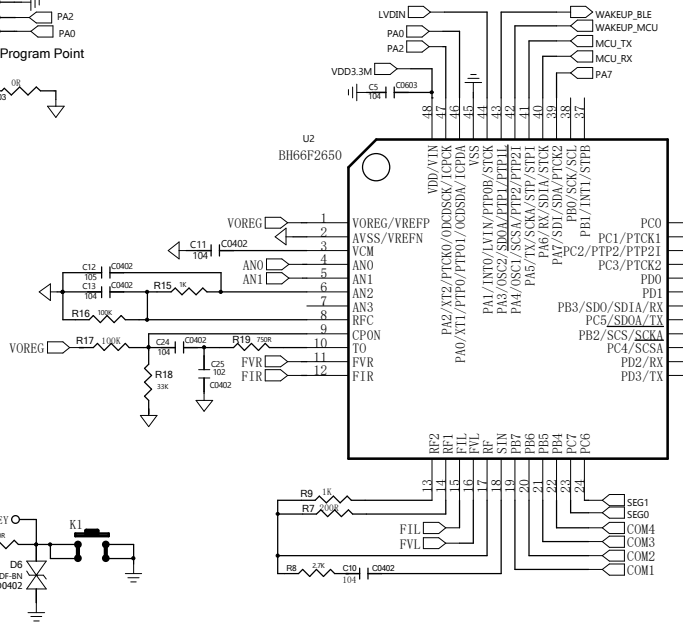

Unit Circuit

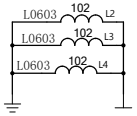

Power Isolation Circuit

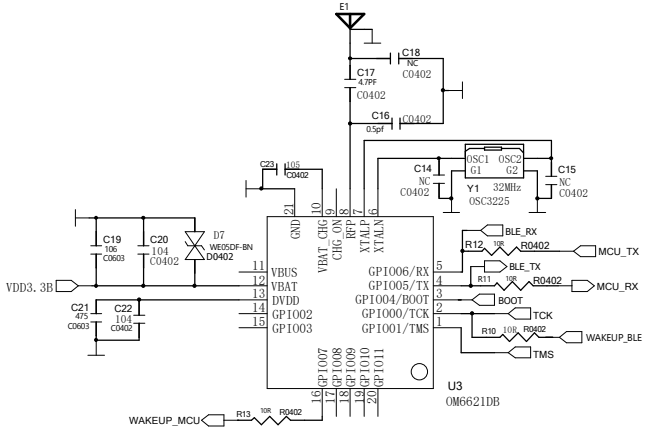

BLE Circuit

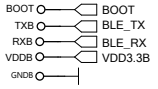

BLE Program Point：BOOT、TXB、RXB、VDDB、GNDB

JLINK Point：TCK、TMS、VDDB、GNDB

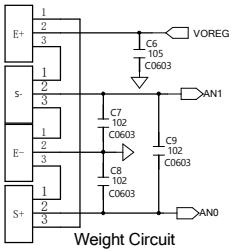

Weight Circuit

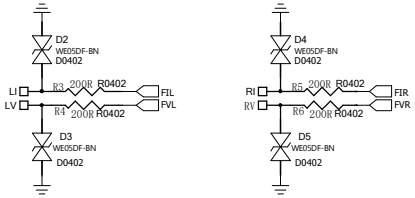

Body Fat Circuit

深圳市乐福衡器有限公司 Shenzhen Unique Scales Co., Ltd			
DRAWING NO: 文件编号		VER: 版本号	V1.0
TITLE: 名称	CF583BLE SCH	Page: 页码	1
Drawn By: 制图	Dong Haiou	DATE: 日期	
Checked By: 审核		DATE: 日期	
APPROVED BY: 批准		DATE: 日期	