EXHIBIT D

Circuit Diagram

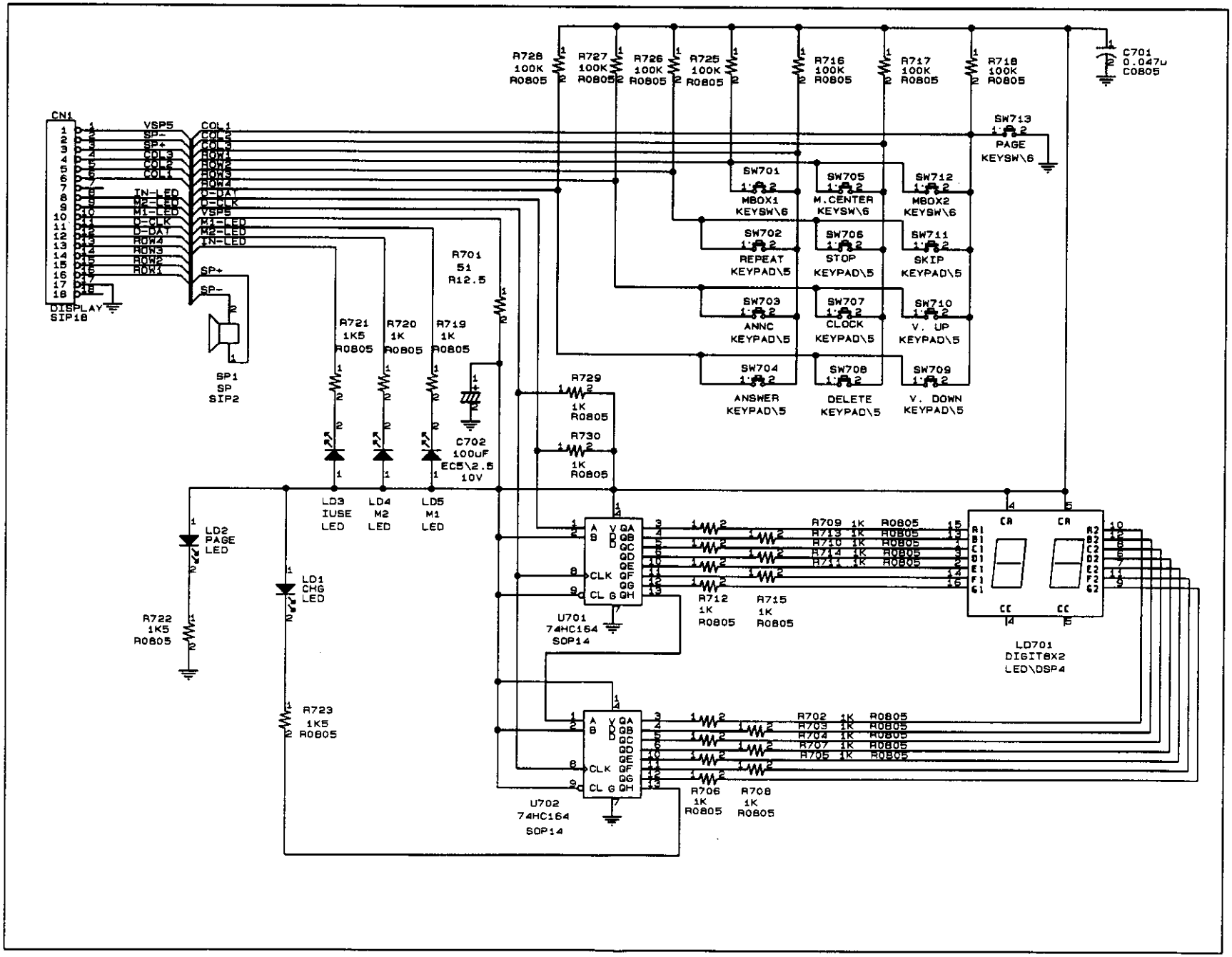
CN1
DISPLAY
SIP18
VSP5
SP-
SP+
COL3
COL2
COL1
IN-LED
M2-LED
M1-LED
D-CLK
D-DAT
ROW4
ROW3
ROW2
ROW1
COL1
COL2
COL3
ROW1
ROW2
ROW3
ROW4
D-DAT
D-CLK
VSP5
M1-LED
M2-LED
IN-LED
SP+
SP-
SP1
SP
SIP2
R728
100K
R0805
R727
100K
R0805
R726
100K
R0805
R725
100K
R0805
R716
100K
R0805
R717
100K
R0805
R718
100K
R0805
C701
0.047u
C0805
SW713
PAGE
KEYSW\6
SW701
MBOX1
KEYSW\6
SW705
M.CENTER
KEYSW\6
SW712
MBOX2
KEYSW\6
SW702
REPEAT
KEYPAD\5
SW706
STOP
KEYPAD\5
SW711
SKIP
KEYPAD\5
SW703
ANNC
KEYPAD\5
SW707
CLOCK
KEYPAD\5
SW710
V. UP
KEYPAD\5
SW704
ANSWER
KEYPAD\5
SW708
DELETE
KEYPAD\5
SW709
V. DOWN
KEYPAD\5
R701
51
R12.5
R721
1K5
R0805
R720
1K
R0805
R719
1K
R0805
C702
100uF
EC5\2.5
10V
LD3
IUSE
LED
LD4
M2
LED
LD5
M1
LED
R729
1K
R0805
R730
1K
R0805
LD2
PAGE
LED
LD1
CHG
LED
R722
1K5
R0805
R723
1K5
R0805
U701
74HC164
SOP14
U702
74HC164
SOP14
R709 1K R0805
R713 1K R0805
R710 1K R0805
R714 1K R0805
R711 1K R0805
R712
1K
R0805
R715
1K
R0805
R702 1K R0805
R703 1K R0805
R704 1K R0805
R707 1K R0805
R705 1K R0805
R706
1K
R0805
R708
1K
R0805
LD701
DIGIT8X2
LED\DSP4

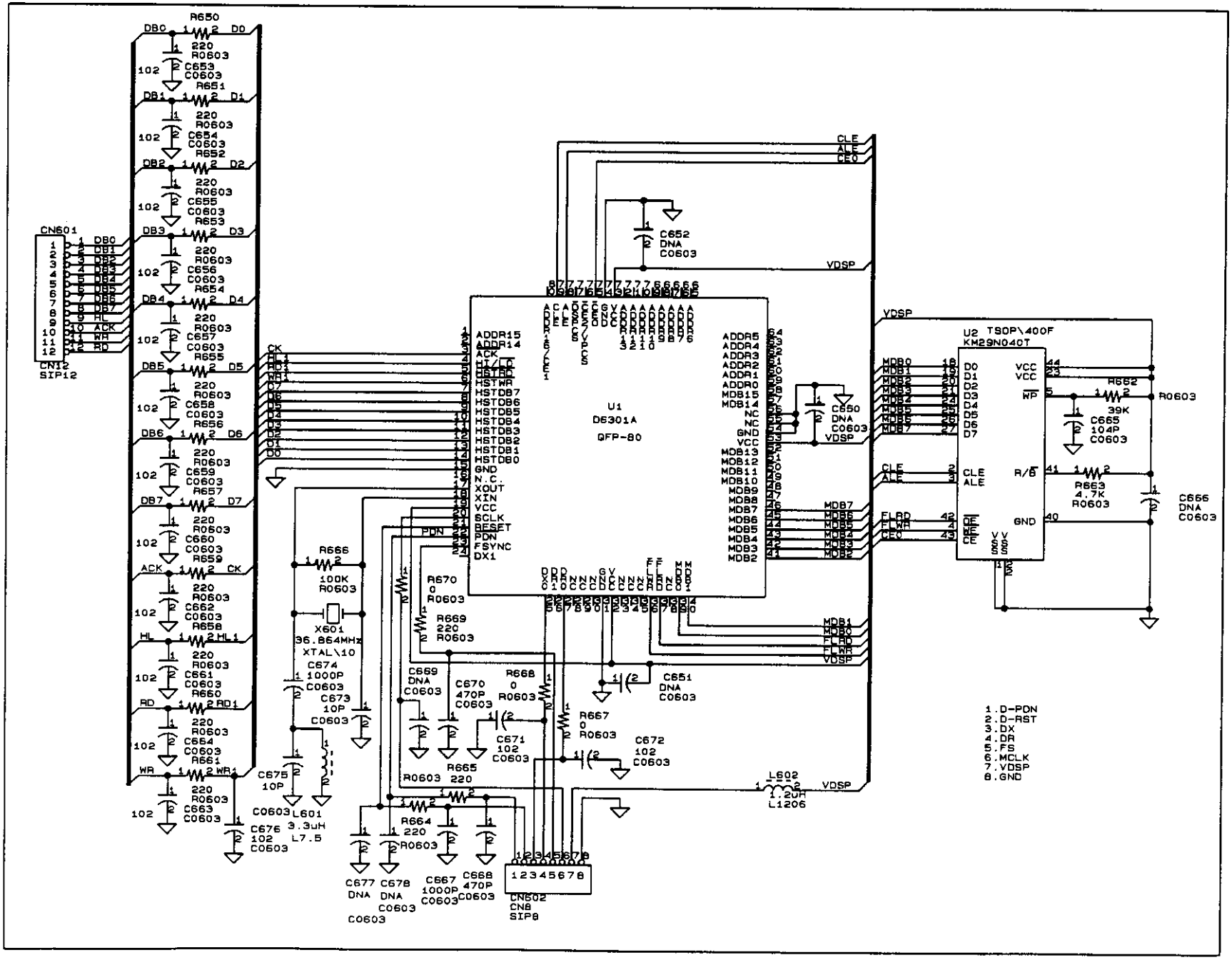
CN601
CN12
SIP12
R650
R651
R652
R653
R654
R655
R656
R657
R658
R659
R660
R661
R662
R663
R664
R665
R666
R667
R668
R669
R670
C653
C654
C655
C656
C657
C658
C659
C660
C661
C662
C663
C664
C665
C666
C667
C668
C669
C670
C671
C672
C673
C674
C675
C676
C677
C678
C650
C651
C652
X601
36.864MHz
XTAL\10
L601
3.3uH
L7.5
L602
1.2uH
L1206
CN602
CN8
SIP8
U1
D6301A
QFP-80
U2 TSOP\400F
KM29N040T
VDSP
1.D-PDN
2.D-RST
3.DX
4.DR
5.FS
6.MCLK
7.VDSP
8.GND

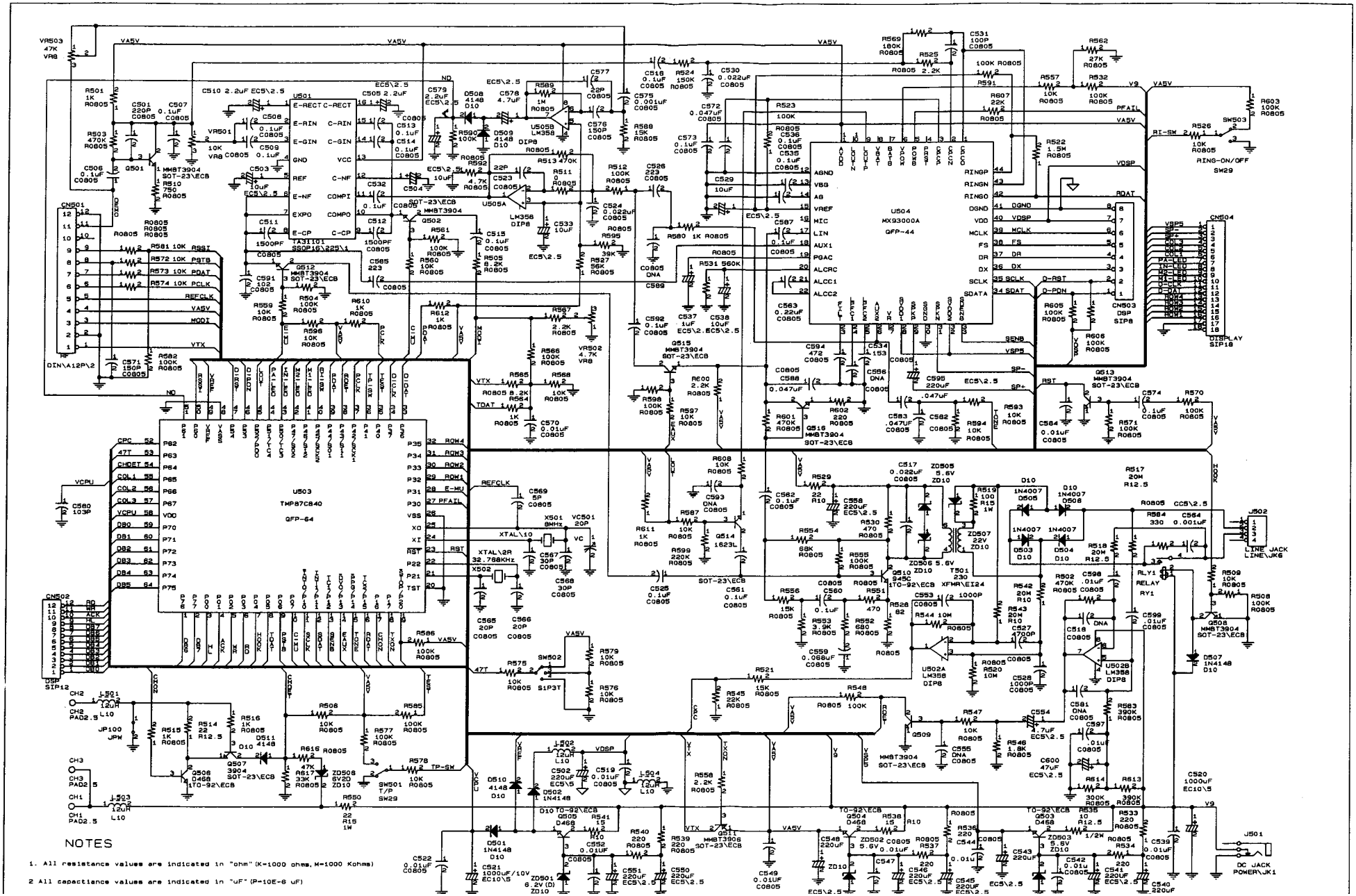
U503
TMP87C840
QFP-64
U504
MX93000A
QFP-44
U501
TA31101
SSOP16\225\1
U505A
LM358
DIP8
U502A
LM358
DIP8
U502B
LM358
DIP8
CN501
CN502
CN503
DSP
SIP8
CN504
DISPLAY
SIP18
CN505
DSP
SIP12
DIN\A12P\2
DC JACK
POWER\JK1
LINE JACK
LINE\JK6
RING-ON/OFF
SW29
RELAY
RY1
T501
230
XFMR\EI24
X501
8MHz
X502
32.768KHz
SW501
T/P
SW29
SW502
S1P3T
JP100
JPW
VAS5V
VDSP
VCPU
REFCLK
XTAL\10
XTAL\2R
PFAIL
RST
VTX
TDAT
RDAT
SCLK
MCLK
DGND
VDD
AGND
VSS
VREF
MIC
LIN
AUX1
PGAC
ALCRC
ALCC1
ALCC2
RINGP
RINGN
RINGO
SDATA
D-RST
D-PDN
SENB
VSP5
SP-
SP+
CH1
CH2
CH3
PA02.5
NOTES
1. All resistance values are indicated in "ohm" (K=1000 ohms, M=1000 Kohms)
2 All capacitance values are indicated in "uF" (P=10E-6 uF)

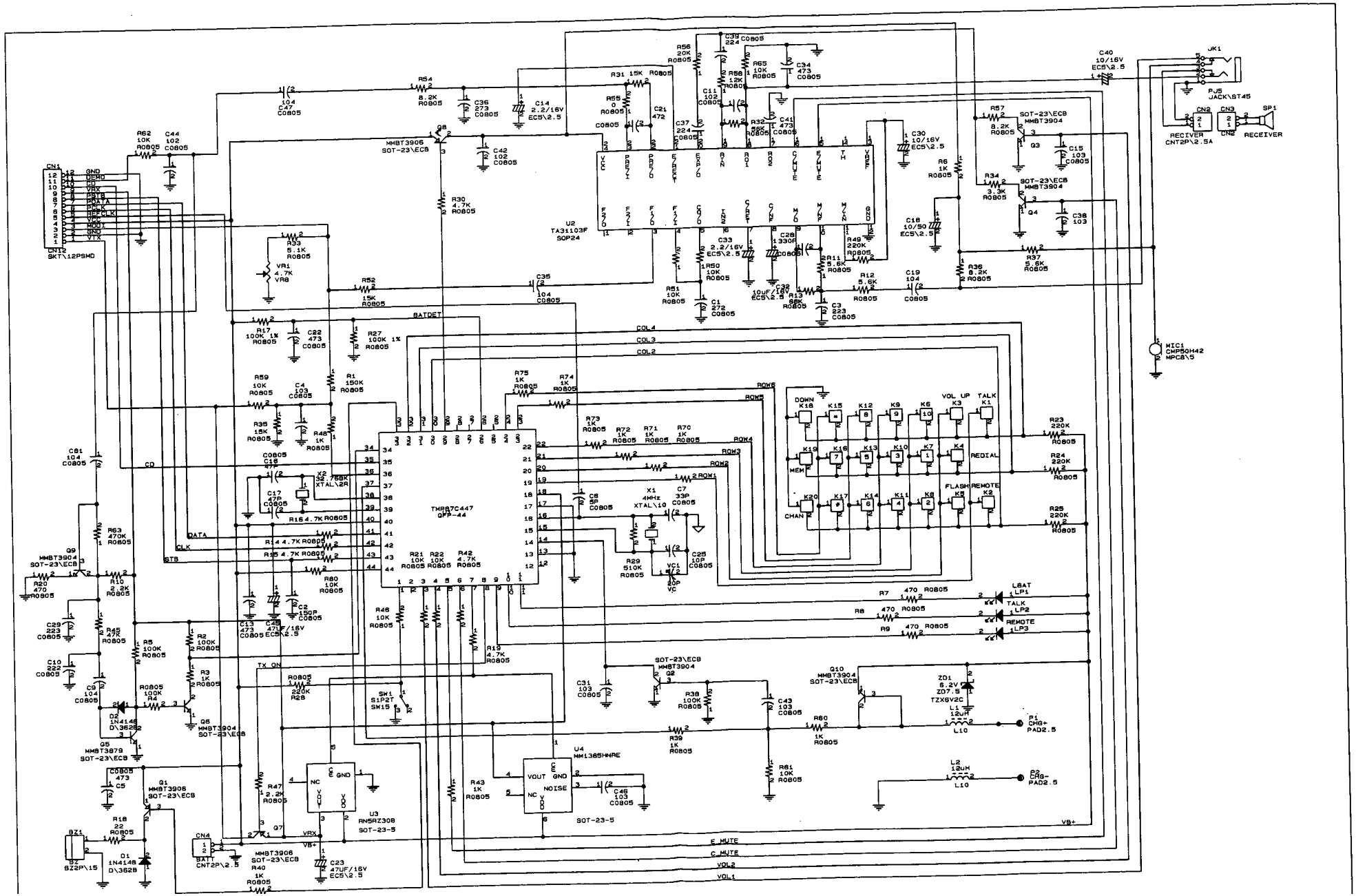
CN1
SKT\12PSMD
GND
DEMO
CD
VRX
PSTB
PDATA
PCLK
REFCLK
VRX
MODI
GND
VTX
U2
TA31103F
SOP24
TMP87C447
QFP-44
U3
AN5RZ308
SOT-23-5
U4
MM1385HNRE
SOT-23-5
JK1
PJ5
JACK\ST45
CN2
CN9
SP1
RECIVER
CNT2P\2.5A
RECEIVER
MIC1
CMP50H42
MPC8\5
CN4
BATT
CNT2P\2.5
BZ1
BZ
BZ2P\15
P1
CHG+
PAD2.5
P2
CHG-
PAD2.5
BATDET
COL4
COL3
COL2
ROW6
ROW5
ROW4
ROW3
ROW2
ROW1
DATA
CLK
STB
CD
TX ON
E MUTE
C MUTE
VOL2
VOL1
VB+
DOWN
K18
VOL UP
K3
TALK
K1
MEM
REDIAL
CHAN
FLASH
REMOTE
K5
K2
LBAT
LP1
TALK
LP2
REMOTE
LP3
ZD1
6.2V
ZD7.5
TZX6V2C
L1
12uH
L10
L2
12uH
L10
VR1
4.7K
VR8
X1
4MHz
XTAL\10
X2
32.768K
XTAL\2R
VC1
20P
VC
SW1
S1P2T
SW15
Q1
MMBT3906
SOT-23\ECB
Q2
MMBT3904
SOT-23\ECB
Q3
MMBT3904
SOT-23\ECB
Q4
MMBT3904
SOT-23\ECB
Q5
MMBT3879
SOT-23\ECB
Q6
MMBT3904
SOT-23\ECB
Q7
MMBT3906
SOT-23\ECB
Q8
MMBT3906
SOT-23\ECB
Q9
MMBT3904
SOT-23\ECB
Q10
MMBT3904
SOT-23\ECB
D1
1N4148
D\3628
D2
1N4148
D\3628