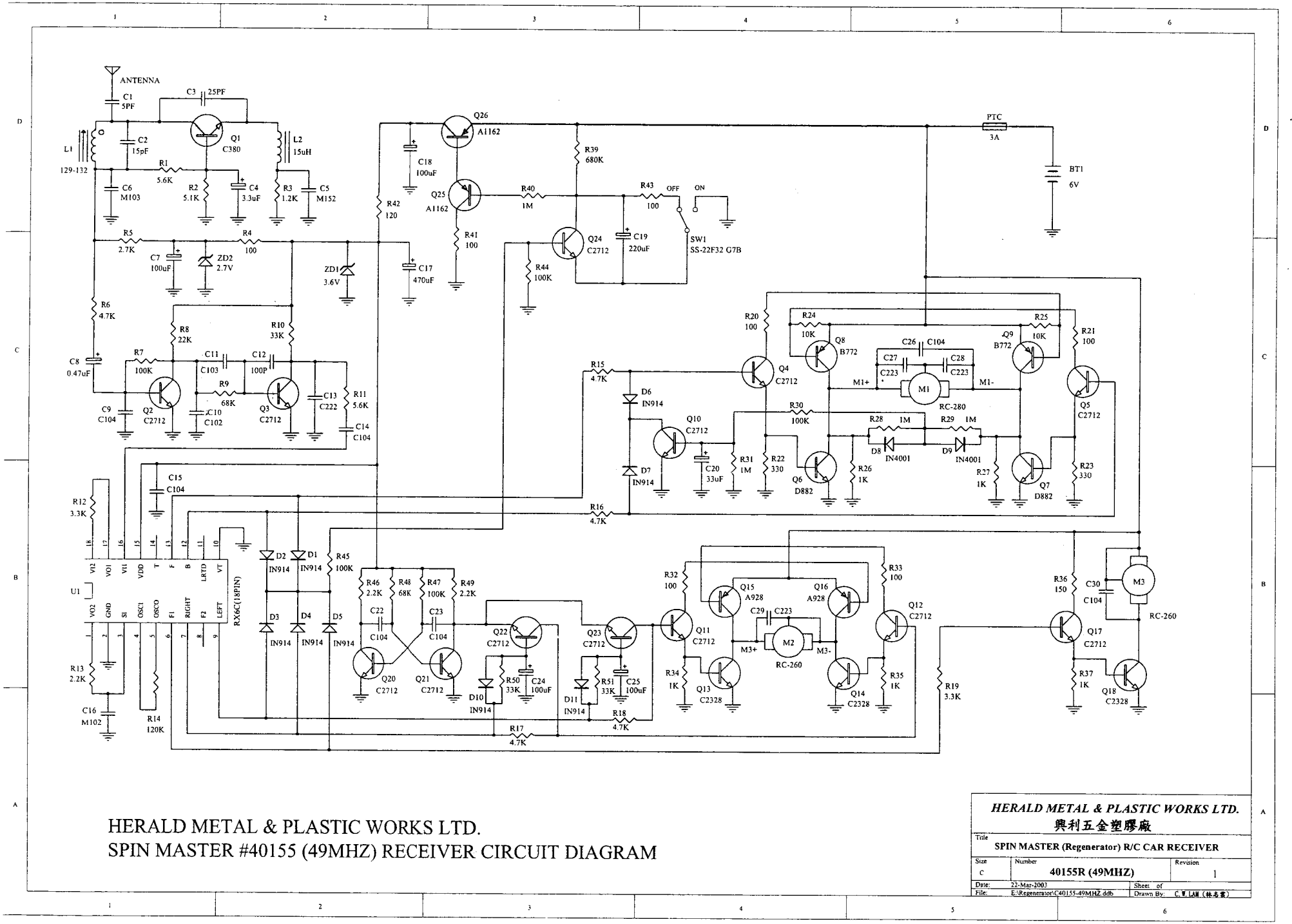

HERALD METAL & PLASTIC WORKS LTD.
SPIN MASTER #40155 (49MHZ) RECEIVER CIRCUIT DIAGRAM

HERALD METAL & PLASTIC WORKS LTD. 興利五金塑膠廠		
Title: SPIN MASTER (Regenerator) R/C CAR RECEIVER		
Size: C	Number: 40155R (49MHZ)	Revision: 1
Date: 22-Mar-2003		Sheet of
File: E:\Regenerator\C40155-49MHZ.ddb		Drawn By: C.W.LAM (林志雲)