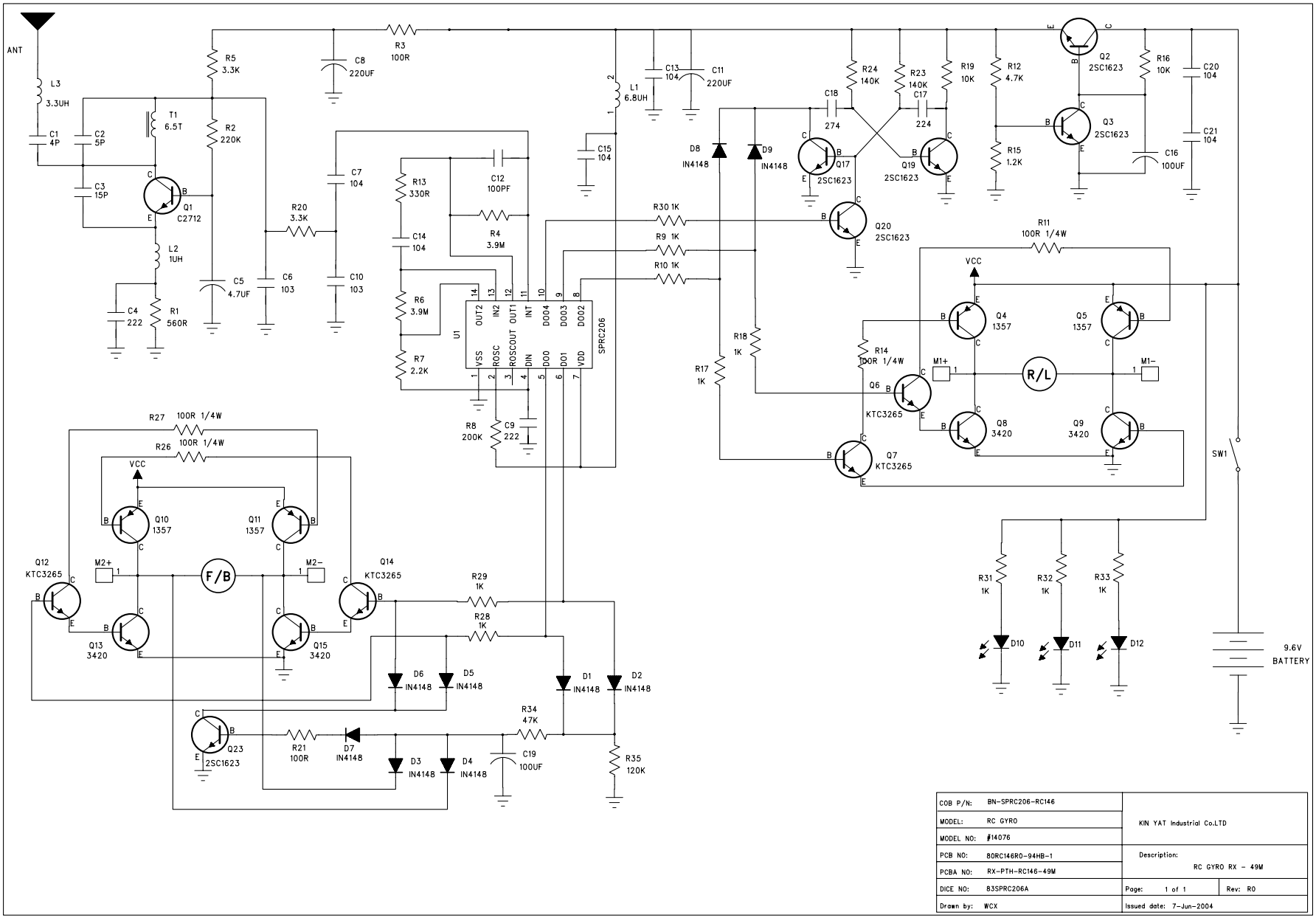

COB P/N:	BN-SPRC206-RC146	KIN YAT Industrial Co.LTD	
MODEL:	RC GYRO		
MODEL NO:	#14076		
PCB NO:	80RC146R0-94HB-1	Description: RC GYRO RX - 49M	
PCBA NO:	RX-PTH-RC146-49M		
DICE NO:	83SPRC206A	Page: 1 of 1	Rev: R0
Drawn by:	WCX	Issued date: 7-Jun-2004	