AVM700Ui

QUICK START GUIDE

Media Receiver with Bluetooth and SiriusXM -Ready™ featuring 7" Touch Screen Display.

This Quick Start Guide gives you the basics to start using your AVM700Ui. Please visit www.axxeraaudio.com/support/manuals.php to download a complete owner's manual or call customer service at 1-866-382-5476 (Monday-Friday, 9AM-5PM EST).

axxera™

Customer Service Toll Free: 1-866-382-5476

Installation

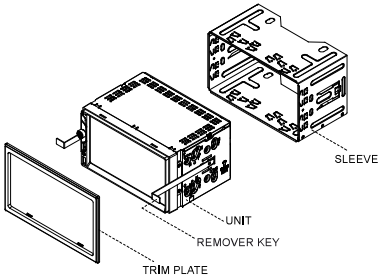

TYPICAL FRONT-LOAD DIN MOUNTING METHOD

Copyright and Trademark Notes

SD Logo is a trademark of SD-3C, LLC.
The Bluetooth® word mark and logos are registered trademarks owned by the Bluetooth SIG, Inc.
Other trademarks and trade names are those of their respective owners.
Sirius, XM and all related marks and logos are trademarks of Sirius XM Radio, Inc. All rights reserved.
Siri and Apple are registered trademarks owned by Apple Inc.
Google Assistant and Android are registered trademarks owned by Google LLC.

Wiring Diagram - Inputs/Outputs

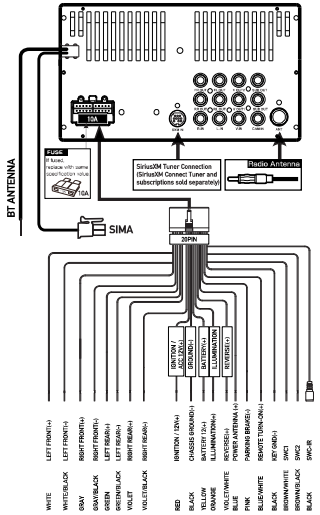

Control Locations

1. IR sensor
2. MIC
3. Short Press- Mode change
   Long Press- Voice Trigger
4. Tune/Track Up
5. Volume/Power/Mute
6. Tune/Track Down
7. miroSD card slot
8. Reset
9. AUX
10. USB port

Remote Control

1. Power
2. Mode
3. Play/Pause
4. Mute
5. Talk
6. End call
7. Setup
8. Zone1
9. Zone2
10. Volume UP
11. Zoom
12. Select
13. Seek Up
14. Volume Down
15. Audio
16. * Key
17. Loudness
18. Number keys
19. Root
20. OSD (On Screen Display)
21. Local/Random
22. Seek Down/ Prevous Track
23. AS/PS/Repeat
24. Stereo
25. Stop
26. Enter/Direct Tune
27. Band
28. SiriusXM Skip Backward
29. SiriusXM Channel Up
30. SiriusXM Skip Forward
31. SiriusXM Channel Down

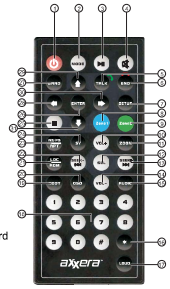

Main Menu

In main menu, press the desired icon to enter the corresponding mode: Radio SiriusXM®, USB Screen Mirroing,USB, SD Card, BT Phone, BT Music, Camera, Aux In, AV In, Settings.

Radio Operation

Select the Radio icon from the Main Menu screen or press MODE until Tuner is selected.

1. Current Mode Indicator
2. Information Display
3. Tune Up
4. Presets
5. AS/PS
6. Stereo
7. Local/Distance
8. Band
9. Tune Down

SiriusXM® Operation

1. **Band**
   Displays SiriusXM® radio band currently selected. Third bands are available: SXM1, SXM2, and SXM3.
2. **Search**
   Press this icon to search channels by category
3. **Channel List**
   Press this icon to see the preset channels per band.
4. **Function**
   Press this icon to list mode/Tune Scan/ Go to Live channels.
5. **Channel Up**
   Press this icon to select station forward manually
6. **Channel Down**
   Press this icon to select station backward manually
7. **Skip forward**
   Tap this icon to skip to the beginning of the current song or prior songs. Press and hold to fast-rewind.
8. **Pause**
   Press this icon to pause the audio.
9. **Skip Backward**
   Tap this icon to skip to the beginning of the current song or prior songs. Press and hold to fast-rewind.
10. **Preset**
    Press and hold to add the current channel to a preset. Tap to recall the preset. a total of 18 presets can be stored, 6 per band.
11. **Content Info**
    Press Song icon to cycle through song, content info and description field

General Operation

Press the function icons to select in Settings

1. Screen Dimmer
2. Voice Activation
3. Audio
4. Navi hot button
5. Settings

Audio Operation

Press Sound Effect icon In setup menu to select Preset, 7-band tone control, Surround and Balance.

1. EQ Setting
2. Surround Setting
3. Balance

Screen Operation

In Settings menu press one of options to adjust the screen condition.

Speaker Zone Operation

Zone 1 Button Press Zone 1 to turn the sound from Zone 1 on or off.
Zone 2 Button Press Zone 2 to turn the sound from Zone 2 on or off.

Bluetooth Operation

Bluetooth Microphone
The microphone is built-in to the receiver.

Pairing and Connecting
Make sure that Bluetooth is activated on your device before you begin the pairing process. The unit broadcasts the pairing signal constantly when no devices are currently connected. Complete the pairing sequence from your Bluetooth device. The device name is "AVM700Ui". The unit can be in any mode of operation when pairing is performed. On certain phones, pairing may need to be done more than once.

Dialing a Number
Press ⠿ to display keypad and dial a number.

Making and Ending a Call
Press 📞 to connect a call, and press ☎ to end a call.

Transfering Audio
Press ▯ to transfer audio between the head unit and mobile phone.

Streaming Audio
Press ⏯ to play or pause the music.
Press ⏮ go back to the previous track.
Press ⏭ to advance to the next track.

Voice Activation Operation

Bluetooth should be paired between your smartphone and the receiver. Press the voice activation button, and the receiver will switch into Bluetooth mode. This will activate Siri® or Google Assistant™ on your smartphone. You will need to manually switch back to the previous or desired mode once this operation is terminated.

On-screen Navi App Operation

Activation of Axxera Smart App should not be closed, but open on your smartphone for this operation. Touching ▲ will guide you instant access to your favorite navigation App on your smartphone. Please refer to the complete manual on www.axxeraaudio.com/support/manuals.php.

APP Operation

The Axxera Smart App is the ultimate wireless remote control for your AVM700Ui receiver. You can download Axxera Smart App from Apple App Store or Google Play Store and install it on your smartphone or tablet.

Please scan the following QR code to download Axxera iPlug P1 App to your smart phone.

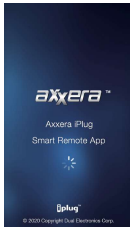

USB Screen Mirroring Operation

See the Owner's Manual for details.

Note:
Operating system updates from Apple and Android may cause issues with your receiver not to function properly. This can usually be fixed by doing a software/firmware update to the receiver itself.
To see if your receiver has the latest firmware, contact customer service at 1-866-382-5476 to see if your radio needs an update.

Drong Screen App's QR Code

One-Year Limited Warranty

This warranty gives you specific legal rights. You may also have other rights which vary from state to state.
Dual Electronics Corp. warrants this product to the original purchaser to be free from defects in material and workmanship for a period of one year from the date of the original purchase.
Dual Electronics Corp. agrees, at our option, during this warranty period, to repair any defect in material or workmanship or to furnish an equal new, renewed or comparable product (whichever is deemed necessary) in exchange without charges, subject to verification of the defect or malfunction and proof of the date of purchase. Subsequent replacement products are warranted for the balance of the original warranty period.
Who is covered? This warranty is extended to the original retail purchaser for products purchased from an authorized Dual dealer and used in the U.S.A.
What is covered? This warranty covers all defects in material and workmanship in this product. The following are not covered: software, installation/removal costs, damage resulting from accident, misuse, abuse, neglect, product modification, improper installation, incorrect line voltage, unauthorized repair or failure to follow instructions supplied with the product, or damage occurring during return shipment of the product. Specific license conditions and copyright notices for the software can be found via www.dualav.com.

What to do?
1. Before you call for service, check the troubleshooting guide in your owner's manual. A slight adjustment of any custom controls may save you a service call.
2. If you require service during the warranty period, you must carefully pack the product (preferably in the original package) and ship it by prepaid transportation with a copy of the original receipt from the retailer to an authorized service center.
3. Please describe your problem in writing and include your name, a return UPS shipping address (P.O. Box not acceptable), and a daytime phone number with your shipment.
4. For more information and for the location of the nearest authorized service center please contact us by one of the following methods:
- Call us toll-free at 1-866-382-5476 (Monday-Friday, 9:00 a.m. to 5:00 p.m. EST)
- E-mail us at cs@dualav.com

Exclusion of Certain Damages: This warranty is exclusive and in lieu of any and all other warranties, expressed or implied, including without limitation the implied warranties of merchantability and fitness for a particular purpose and any obligation, liability, right, claim or remedy in contract or tort, whether or not arising from the company's negligence, actual or imputed. No person or representative is authorized to assume for the company any other liability in connection with the sale of this product. In no event shall the company be liable for indirect, incidental or consequential damages.

FCC Compliance

This device complies with Part 15 of the FCC Rules. Operation is subject to the following two conditions:
(1) this device may not cause harmful interference.
(2) this device must accept any interference received, including interference that may cause undesired operation.
Warning: Changes or modifications to this unit not expressly approved by the party responsible for compliance could void the user's authority to operate the equipment.
Note: This equipment has been tested and found to comply with the limits for a Class B digital device, pursuant to Part 15 of the FCC Rules. These limits are designed to provide reasonable protection against harmful interference in a residential installation. This equipment generates, uses and can radiate radio frequency energy and, if not installed and used in accordance with the instructions, may cause harmful interference to radio communications.
However, there is no guarantee that interference will not occur in a particular installation. If this equipment does cause harmful interference to radio or television reception, which can be determined by turning the equipment off and on, the user is encouraged to try to correct the interference by one or more of the following measures:
- Reorient or relocate the receiving antenna.
- Increase the separation between the equipment and receiver.
- Connect the equipment into an outlet on a circuit different from that to which the receiver is connected.
- Consult the dealer or an experienced radio/TV technician for help.

⚠ **WARNING**: Cancer and Reproductive Harm – www.P65Warnings.ca.gov.
⚠ **ADVERTENCIA**: Cáncer y Daño Reproductivo - www.P65Warnings.ca.gov.

www.axxeraaudio.com
©2020 Dual Electronics Corp.
NSC0120-V01